University of Southern Queensland
Faculty of Engineering and Surveying

Design of a Small Wind Turbine

A dissertation submitted by

Mr Simon James Strong

in fulfilment of the requirements of

Courses ENG4111 and 4112 Research Project

towards the degree of

Bachelor of Engineering (Mechanical)

October, 2008

Abstract

This project aims to develop a simple and economical Small Wind Turbine (SWT) design. The turbine is intended to be used in regional Queensland, requiring an investigation into the available wind resources.

Anthropogenic climate change is driving a world-wide renewable energy revolution. Rising fossil fuel prices as a result of dwindling reserves is prompting the investigation of alternative energy sources. In Queensland the presence of a market for small off-grid or remote area power supplies, has led to the consideration of SWTs as an increasingly viable alternative energy source capable of meeting future demands.

This project sets out three major objectives:

1. A complete SWT design integrating commercially available components with engineered structural parts, some of which may utilise fibre-composite materials. This includes a 3D parametric model, manufacturing drawings and system specifications. Considerable allowance is given for manufacture, installation, maintenance and decommissioning.
2. An investigation into wind resources in Queensland, and a proposed installation site, or sites that could benefit from the use of wind power; and,
3. An estimation of the SWTs power output and a total system price to evaluate against similar products, with a Cost Benefit Analysis to support the design feasibility.

The research methodology was divided into three subparts:

a) Conduct a literature review investigating background information, current technology and issues, to form the basis of the design.

b) Research a potential installation site in regional Queensland by cross-referencing data from the Australian Bureau of Meteorology with information pertaining to the extent of Queensland's electricity distribution network.

c) Develop a simple and economical SWT design by synthesizing commercially available components and engineered parts into a working conceptual solution.

Analysis of the performance and economic feasibility of the conceptual design enabled comparative assessment of the SWT against other forms of energy including different renewable devices, diesel generators and conventional grid-connected electrical power.

The research has found that technical advancements in SWT technology, achieved through engineering research and innovation, are increasing with product demand. An innovative idea has been proposed for the yawing and furling mechanism of the turbine, and a basic engineered system has been planned. It is anticipated that this research will provide a foundation for improvements on the proposed design, and that through more focused research objectives a more technically sophisticated product may be developed.

Limitations of Use

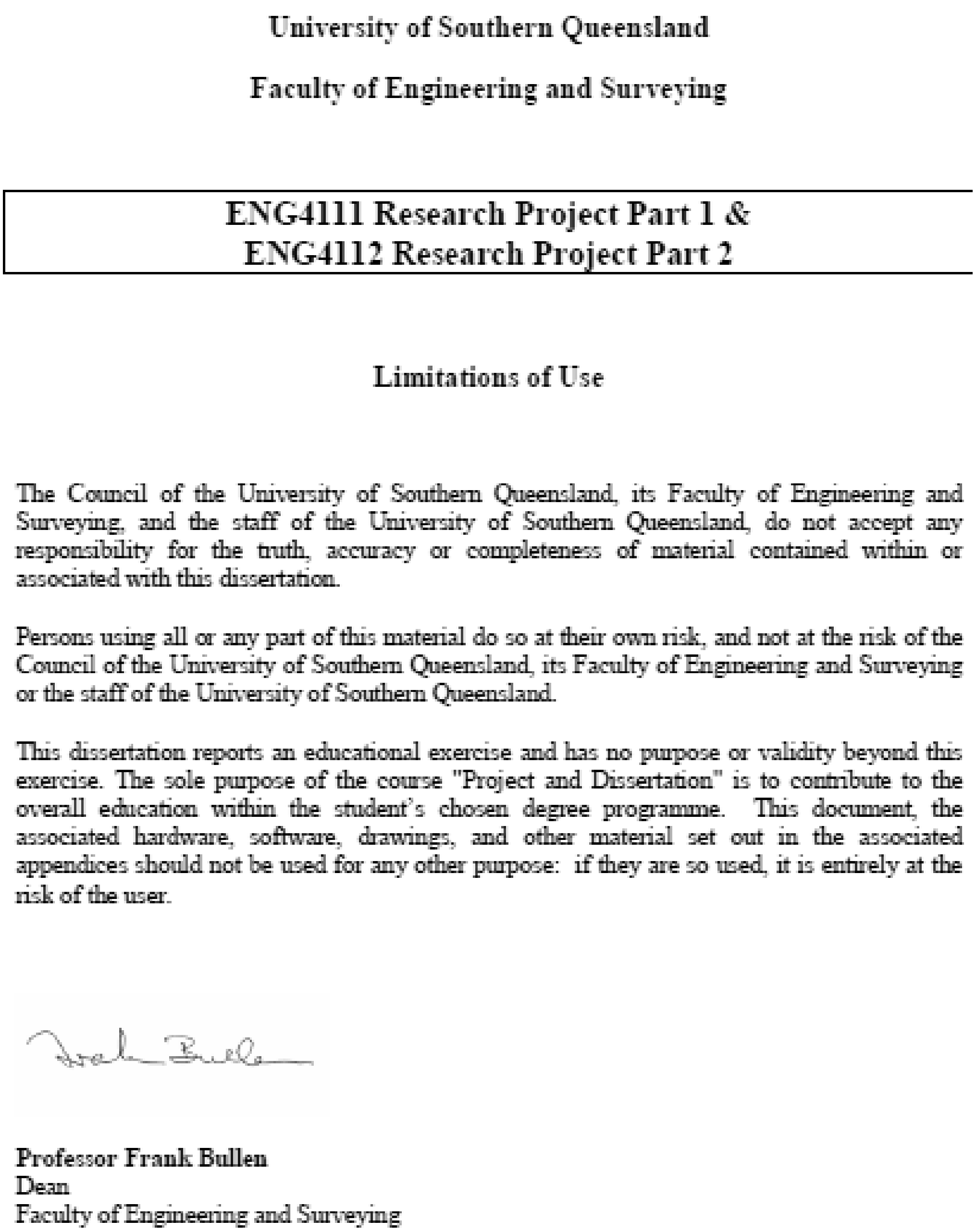

University of Southern Queensland

Faculty of Engineering and Surveying

ENG4111 Research Project Part 1 &
ENG4112 Research Project Part 2

Limitations of Use

The Council of the University of Southern Queensland, its Faculty of Engineering and Surveying, and the staff of the University of Southern Queensland, do not accept any responsibility for the truth, accuracy or completeness of material contained within or associated with this dissertation.

Persons using all or any part of this material do so at their own risk, and not at the risk of the Council of the University of Southern Queensland, its Faculty of Engineering and Surveying or the staff of the University of Southern Queensland.

This dissertation reports an educational exercise and has no purpose or validity beyond this exercise. The sole purpose of the course "Project and Dissertation" is to contribute to the overall education within the student's chosen degree programme. This document, the associated hardware, software, drawings, and other material set out in the associated appendices should not be used for any other purpose: if they are so used, it is entirely at the risk of the user.

Professor Frank Bullen
Dean
Faculty of Engineering and Surveying

Certification

I certify that the ideas, designs and experimental work, results, analyses and conclusions set out in this dissertation are entirely my own effort, except where otherwise indicated and acknowledged.

I further certify that the work is original and has not been previously submitted for assessment in any other course or institution, except where specifically stated.

Name:	**Mr. Simon James Strong**
Student Number:	**0011120946**

Signature

Date

Acknowledgements

I would like to acknowledge my supervisor, Dr. Jayantha Epaarachchi, for his guidance throughout this research project. His valuable knowledge and assistance were greatly appreciated.

I owe great thanks to my partner, Carla McKeever, for her considerable patience and moral support. And I would also like to thank my immediate family for their love and encouragement. To these people I must credit the motivation I required to persevere with this project to its completion.

I acknowledge the faculty and library staff for their prompt and helpful assistance, and to all of the manufacturers and suppliers who were able to offer quotes and other useful information.

Table of Contents

Abstract i

Limitations of Use iii

Certification iv

Acknowledgements v

Table of Contents vi

List of Figures x

List of Tables xiii

List of Tables xiii

Nomenclature xiv

CHAPTER 1 INTRODUCTION 1

1.1 Outline of the Study 1
1.2 Introduction 1
1.3 Research Objectives 3
1.4 Project Outcomes 3
1.5 Consequences and Implications 4
  1.5.1 Ethical 4
  1.5.2 Safety 5
  1.5.3 Social 6
  1.5.4 Economic 6
  1.5.5 Environmental 6
1.6 Methodology 6
1.1 Conclusions 8

CHAPTER 2 LITERATURE REVIEW 9

2.1 Introduction 9
2.2 Energy Sources 10
2.3 Drivers of Renewable Energy Sources 11
  2.3.1 Climate Change 11
  2.3.2 Finite Energy Supplies 17
  2.3.3 Benefits of Renewable Energy Sources 17

2.3.4 Government Initiatives 19
2.4 Small-Scale Wind Energy 22
2.4.1 Introduction 22
2.4.2 Background 23
2.4.3 Current Technology 25
2.4.4 Market 30
2.4.5 Issues 33
2.4.5.1 Noise 34
2.4.5.2 Visual 35
2.4.5.3 Safety 36
2.4.5.4 Electromagnetic Interference 37
2.4.5.5 Environmental 37
2.4.5.6 Planning 37
2.5 Summary 38
2.6 Conclusions 38
CHAPTER 3 RESEARCH DESIGN AND METHODOLOGY 40
3.1 Introduction 40
3.2 Conceptual Design 41
3.3 Fundamental Principles 44
3.4 Wind Resource and Siting 47
3.5 Target Location 51
3.6 Design 56
3.6.1 Generator 56
3.6.1.1 Functional Description 56
3.6.1.2 Operational specification or requirements 57
3.6.1.3 Reliability and Maintainability 57
3.6.1.4 Selection and Cost 58
3.6.2 Rotor Blades 60
3.6.2.1 Functional Description 60
3.6.2.2 Design Considerations 60
3.6.2.3 Material and Manufacture 61
3.6.2.4 Reliability and Maintainability 62
3.6.2.5 Selection and Cost 62
3.6.3 Hub 65
3.6.3.1 Functional Description 65

3.6.3.2 Design Considerations 65
3.6.3.3 Material and Manufacture 65
3.6.3.4 Reliability and Maintainability 65
3.6.3.5 Final Design 66
3.6.4 Turbine Body and Tail with Yaw and Furl Mechanisms 68
3.6.4.1 Functional Description 68
3.6.4.2 Design Considerations 68
3.6.4.3 Material and Manufacture 69
3.6.4.4 Reliability and Maintainability 69
3.6.4.5 Final Design 69
3.6.5 Tower 80
3.6.5.1 Functional Description 80
3.6.5.2 Design Considerations 80
3.6.5.3 Material and Manufacture 81
3.6.5.4 Reliability and Maintainability 81
3.6.5.5 Final Design 81
3.6.6 Electrical and Control Systems 87
3.6.7 Implementation 88
3.6.8 System Specification 89
3.7 Summary 92
CHAPTER 4 DATA ANALYSIS 94
4.1 Introduction 94
4.2 Design Evaluation 94
4.2.1 Target Location 94
4.2.2 Conceptual Design 95
4.2.3 Final Component Designs 95
4.2.4 Bought-in Component Selection 97
4.2.5 System Integration 97
4.3 Cost Benefit Analysis 98
4.3.1 Quantitative Costs and Benefits 98
4.3.2 Qualitative Costs and Benefits 100
4.3.3 Financial Assistance 100
4.3.4 Sensitivity 101
4.3.5 Outcomes 104
4.4 Summary 108
CHAPTER 5 CONCLUSIONS 109

5.1 Introduction 109
5.2 Discussion 109
5.3 Further Research and Recommendations 111
5.4 Summary 112
APPENDIX A 113
A.1 Project Specification 114
APPENDIX B 115
B.1 Table of Small Wind Turbines – a comparison 116
B.2 Roughness Length Table 119
B.3 Target Location - site information and wind roses 120
B.4 Ginlong PMG Data 126
B.5 Manufacturing drawings 128
B.6 Properties of GFRP Orthotropic Elasticity 142
REFERENCES 144

List of Figures

Figure 2.1 – Plot of historical human energy consumption (Hau 2006) 11

Figure 2.2 – Trends in atmospheric concentrations of GHGs over the last 1000 years (BOM 2003) 14

Figure 2.3 – Australian energy production by fuel type (ABARE 2008) 18

Figure 2.4 – Australian energy consumption by fuel type (ABARE 2008) 18

Figure 2.5 – Proposed 2020 renewable energy generation mix, by fuel type (AGO 2003b) 21

Figure 2.6 – 70m wind speeds for the period May 1997 – April 1999 (Mills 2001 (cited in Coppin, Ayotte & Steggel 2003)) 23

Figure 2.7 – Rural windmill (State of Environment Townsville 2008) 25

Figure 2.8 – Variety of wind turbine configurations (Manwell, McGowan & Rogers 2002) 27

Figure 2.9 – Images of (a) HAWT, (b) Darrieus and (c) Savonius configurations (Webb 2007) 28

Figure 2.10 – Power coefficient vs tip speed ratio for a variety of turbine configurations (Hau 2006) 28

Figure 2.11 – Queensland Electricity Distribution Network (Ergon Energy 2008a) .. 32

Figure 2.12 – Potential Renewable Energy Sites in Queensland (EPA 2007) 33

Figure 3.1 – SWT System Diagram (author’s original image 2008) 40

Figure 3.2 – Diagram of Conceptual Design (author’s original image 2008) 43

Figure 3.3 – Diagram of Conceptual Design (author’s original image 2008) 45

Figure 3.4 – Wind flow over a steel hill (Coppin, Ayotte & Steggel 2003) 49

Figure 3.5 – Tree flagging as a visual indicator of local wind speed (Coppin, Ayotte & Steggel 2003) 50

Figure 3.6 – Griggs-Putnam Index of Deformity (Coppin, Ayotte & Steggel 2003) .. 50

Figure 3.7 – Map of potential installation sites (author's original image 2008)..........51

Figure 3.8 – Torres Strait Mean Wind Speed (BOM 2008) 55

Figure 3.9 – Views of Ginlong GL-PMG-1000 (Ginlong 2006)................................59

Figure 3.10 – Power curve of GL-PMG-1000 (Ginlong 2006) 59

Figure 3.11 – Open Circuit Voltage of GL-PMG-1000 (Ginlong 2006)...................59

Figure 3.12 – Selected rotor blade (Applied Magnetics 2008)...................................64

Figure 3.13 – Hub Loads (author's original image 2008) 67

Figure 3.14 – Image of designed hub (author's original image 2008)........................67

Figure 3.15 – Plan and Elevation views of Yaw/Furl Mechanism concept – normal operating position (author's original image 2008)...71

Figure 3.16 – Plan View of Yaw/Furl Mechanism concept – furled position (author's original image 2008)...72

Figure 3.17 – Plan and elevation views of tail pivot (author's original image 2008)..73

Figure 3.18 – Plan and elevation views of tail pivot (author's original image 2008)..75

Figure 3.19 – SWT Power curve (author's original image 2008)...............................79

Figure 3.20 – Turbine body (author's original image 2008) 79

Figure 3.21 – Image of turbine (author's original image 2008) 80

Figure 3.22 – Drag coefficient for a smooth circular cylinder as a function of Reynolds number (Fox, McDonald & Pritchard 2004) 83

Figure 3.23 – Composition of GFRP laminate (author's original image 2008) 84

Figure 3.24 – GFRP Tower FEA analysis results (author's original image 2008)......86

Figure 3.25 – Raising/Lowering of Tower (author's original image 2008) 87

Figure 3.26 – USQ SWT SolidWorks assembly (author's original data 2008)...........90

Figure 4.1 – CBA Sensitivity Analysis - Best and Worst Case Scenarios (author's original data 2008)...105

Figure 4.2 – CBA Sensitivity Analysis - Scenarios 2 & 3 (author's original data 2008) 105

Figure 4.3 – CBA Sensitivity Analysis – Scenarios 4 & 5 (author's original data 2008) 106

Figure 4.4 – CBA Sensitivity Analysis – Scenarios 6 & 7 (author's original data 2008) 106

Figure 4.5 – CBA Sensitivity Analysis – Scenarios 8 & 9 (author's original data 2008) 107

Figure 4.6– CBA Sensitivity Analysis – Scenarios 10 & 11 (author's original data 2008) 107

Figure B.2.1 – Roughness lengths and classes for various surface characteristics (Hau 2006) 119

Figure B.3.1 – Sandy Cape Lighthouse site data (BOM 2008) 120

Figure B.3.2 – Sandy Cape Lighthouse 9am wind rose (BOM 2008) 121

Figure B.3.3 – Sandy Cape Lighthouse 3pm wind rose (BOM 2008) 121

Figure B.3.4 – Thursday Island site data (BOM 2008) 122

Figure B.3.5 – Thursday Island 9am wind rose (BOM 2008) 123

Figure B.3.6 – Thursday Island 3pm wind rose (BOM 2008) 123

Figure B.3.7 – Lockhart River Airport site data (BOM 2008) 124

Figure B.3.8 – Lockhart River Airport 9am wind rose (BOM 2008) 125

Figure B.3.9 – Lockhart River Airport 3pm wind rose (BOM 2008) 125

Figure B.4.1 – Ginlong 1 kW Generator Specification (Ginlong 2006) 126

Figure B.4.2 – Ginlong 1 kW Generator mounting details (Ginlong 2006) 127

Figure B.4.3 – Ginlong 1 kW Generator shaft details (Ginlong 2006) 127

Figure B.6.1 – Longitudinal modulus, E_x (MPa), Poisson ratio, υ_{xy}, and coefficient of thermal expansion, α_x, as a function of the ply percentages in the directions 0°, 90°, +45° and -45° (Gay, Hoa & Tsai 2003) 142

Figure B.6.2 – Shear modulus, G_{xy} (MPa) as a function of the ply percentages in the directions 0°, 90°, +45° and -45° (Gay, Hoa & Tsai 2003) 143

List of Tables

Table 2.1 – Examples of Sound Pressure Levels (Burton et al 2001) 35

Table 3.1 – Target location comparison matrix (author's original) 54

Table 3.2 – Comparison of commercially available generators (data acquired by author from suppliers 2008) 58

Table 3.3 – Blade material properties and costs (Hau 2006, Ashby & Jones 2005) ... 61

Table 3.4 – Comparison of commercially available blades (data acquired by author from suppliers 2008) 64

Table 3.5 – USQ SWT Specification (author's original data 2008) 91

Table 3.6 – USQ SWT System Cost (author's original data 2008) 92

Table 4.1 – CBA Sensitivity Analysis Scenario Matrix (author's original data 2008) 103

Table B.1.1 – SWT comparison table (author's compiled information 2008) 116

Table B.1.2 – SWT comparison table (author's compiled information 2008) 117

Table B.1.3 – SWT comparison table (author's compiled information 2008) 118

Nomenclature

The following terms are frequently used throughout the dissertation:

CBA – Cost Benefit Analysis

FEA – Finite Element Analysis

GFRP – Glass-Fibre Reinforced Polymer

GHG – Greenhouse Gas

HAWT – Horizontal Axis Wind Turbine

IPCC – Intergovernmental Panel on Climate Change

MRET – Mandatory Renewable Energy Target

PMG – Permanent Magnet Generator

R&D – Research and Development

RAPS – Remote Area Power Supply

REC – Renewable Energy Certificate

RPM – Revolutions Per Minute

RRPGP – Renewable Remote Power Generation Program

SGU – Small Generator Unit

SWT – Small Wind Turbine

VAWT – Vertical Axis Wind Turbine

Chapter 1 Introduction

1.1 Outline of the Study

The need for designing a Small Wind Turbine (SWT) stems from two global issues; the first issue is climate change, and the increasing urgency for sustainable energy practices to be developed and implemented. The second issue is finite fossil fuel supplies, and the need to replace existing energy sources with renewable forms. This project will consider the implementation of sustainable energy practices in communities that:

a) Do not have access to reliable energy services, or;

b) Have access, but choose to put into practice the changes that are required to realise fully sustainable energy practices.

A Small Wind Turbine represents a medium through which the need for the development of renewable technologies can be addressed by individuals and small communities.

1.2 Introduction

In a summary of the Johannesburg Plan of Implementation that was adopted at the World Summit on Sustainable Development in 2002, the United Nations Department for Economic and Social Affairs, Division for Sustainable Development, emphasise the following recommendations (UNDESA 2008):

a) Improve access to reliable, affordable, economically viable, socially acceptable and environmentally sound energy services.

b) Recognize that energy services have positive impacts on poverty eradication and the improvement of standards of living.

c) Develop and disseminate alternative energy technologies with the aim of giving a greater share of the energy mix to renewable energy and, with a sense of urgency, substantially increase the global share of renewable energy sources.

d) Diversify energy supply by developing advanced, cleaner, more efficient and cost-effective energy technologies.

The Australian Government recognises these issues and the need for developments in sustainable energy technologies. Several actions to address the issues nationally are underway. These include, but are not limited to (ORER 2008a):

a) A Mandatory Renewable Energy Target (MRET) that aims to achieve 20 percent of the nation's energy production through renewable energy sources by the year 2020.

b) The Kyoto Protocol, which was recently signed and ratified, and requires management of greenhouse gas emissions.

c) The Queensland Sustainable Energy Innovation Fund (QSEIF) that provides funding for the development and commercialisation of sustainable technologies.

d) Grid supply tariffs for individuals with excess power generated by renewable energy devices.

Development and commercialisation of sustainable energy technologies is fundamental to endeavours to reduce climate change. It is not expected that any one form of renewable energy will solve the issue of global warming and replace all fossil fuels. Similarly, the environmental, economical, and social impacts of deploying renewable technologies are not considered flawless or without consequences of their own.

The foundation for this research is thus recognition of the need for sustainable practices and development of renewable energy sources, and recognition of the benefits that such forms of energy can have for individuals and communities, particularly where conventional grid-supplied electricity is not available.

The implementation of solutions to a global problem at a community or individual level is an empowering process. Greater social awareness of energy consumption and its implications will increase an individual's sense of responsibility for personal energy use. Small Wind Turbines represent one way in which individuals or communities can take responsibility for their own energy consumption and by doing so, make a small but worthwhile addition to a global effort.

1.3 Research Objectives

The research objectives aim to be specific, measurable and achievable. The key technical research objectives of this project are:

1. To develop a comprehensive understanding of the physical principles of harnessing wind energy. This will include an understanding of both the wind as a resource, and the mechanical and electrical components required to convert the wind energy to a usable form.
2. To apply this knowledge and produce a conceptual design of a Small Wind Turbine with a power output of at least 1 kW.
3. To apply engineering knowledge and skill to develop the conceptual ideas into a reliable, functional and efficient design, with appropriate consideration for manufacture, transport, installation, maintenance, operation and decommissioning.
4. To critically analyse the design and where possible, use sound engineering judgement to make improvements.
5. To calculate specifications and outputs of the design.
6. To perform a Cost Benefit Analysis that will provide a measure of how competitive the design will be in comparison to other forms of energy. In conjunction with the specifications of the design, this will also facilitate direct comparison with similar products.

1.4 Project Outcomes

The outcomes of this project will be achieved through successful completion of the research objectives. The following specific outcomes are planned to be achieved:

a) A technical specification of the final product, including all system specifications and component specifications.

b) Predicted system outputs, such as approximate power curves over the wind speed range, and estimated power production capacity.

c) A 3D-modelled design, with fully-engineered components integrated into a complete system, developed to a point beyond which the design could be manufactured.

d) A unique and viable alternative to conventional energy sources, with allowance for manufacture, installation, maintenance and decommissioning.

e) A proposed installation site, or sites, that could benefit from the use of wind power, or act as a model to other communities and individuals of the ability to take responsibility for personal energy use.

f) A total cost, and comparisons with similar products, with a Cost Benefit Analysis to support the design feasibility.

The following general outcomes indicate the perceived future benefits of the completed research:

a) A contribution to a current and global problem.

b) A feasible design with the potential to become a marketable product.

c) A platform for further research.

1.5 Consequences and Implications

The consequences and implications for future implementation of a Small Wind Turbine design are considered here, including the ethical, safety, social, economic and environmental consequences and implications.

1.5.1 Ethical

One implication of commissioning a SWT is an engineer's ethical obligation to the public, to a client, and to the engineering profession. The expectations for all engineers practicing in Australia are set out by the Code of Ethics (Engineers Australia, 2000), which states:

> "All members of the Institution of Engineers, Australia, in the practice of the discipline of engineering, are committed and obliged to apply and uphold the Cardinal Principles of the Code of Ethics, which are:
>
> - to respect the inherent dignity of the individual
> - to act on the basis of a well informed conscience and
> - to act in the interest of the community."

It is under these three principles that the SWT is to be developed and implemented, with particular emphasis on the key issues that are known to surround wind turbines in general. These include:

a) The environmental impact of the machine, particularly with regard to bird and bat species.
b) The social impact of the machine, especially safety, aesthetics, noise and electromagnetic interference.
c) The legal issues such as local standards, zoning and regulations.

1.5.2 Safety

Manwell, McGowan and Rogers (2002) identify that the primary hazards associated with wind turbines are related to the rotation of the rotor, the possibility of public access to potentially dangerous machinery, and the generated electricity. The identifiable hazards include (Manwell, McGowan and Rogers, 2002):

a) Blade throw – failure of a blade may result in the blade being disconnecting from the hub.
b) Falling ice or thrown ice – in cold climates, accumulated ice also has the potential to be thrown from the blades.
c) Tower failure – most likely caused by extreme winds.
d) Attractive nuisance – the public may be curious, and want to touch, open, climb or otherwise interfere with the machine.
e) Fire hazards – particularly when the turbine is located in an arid and remote location where fuel may grow around the turbine uncontrollably.
f) Worker hazards – machine maintenance involves certain hazards, and these can be magnified if the person maintaining the machine is not a trained professional.
g) Electromagnetic fields – caused by the flow of a current through a conductor.

The risk of occurrence of each of the identified hazards needs to be assessed before the commencement of any installation. A thorough Risk Assessment evaluates all of the identifiable hazards and makes recommendations for the mitigation of each.

1.5.3 Social

The social implications of a Small Wind Turbine installation are directly related to potential public disturbances. The following issues are common to several sources (Manwell, McGowan and Rogers, 2002; Hau, 2006) and are normally associated with large wind turbines, particularly at a megawatt scale. They remain significant nonetheless, since public perceptions will still dictate that these issues need to be carefully addressed:

a) Visual amenity
b) Shadow flicker
c) Noise
d) Electromagnetic interference

1.5.4 Economic

It is unlikely that an individual SWT installation will have wider economic implications within a community. The potential economic implications of a SWT installation are related to the costs associated with turbine operation and maintenance being borne by the owner.

1.5.5 Environmental

SWTs are intended to be “clean and green” energy conversion systems, having minimal impact on the environment. This is not entirely achievable. The greatest consequence of a turbine installation, in the context of environmental impact, is the danger to bird and bat species. Mitigation measures can be implemented to reduce this hazard.

1.6 Methodology

The research methodology is divided into seven subparts:

1. Literature relevant to SWTs and their associated issues will be reviewed, and background information researched. This task will be undertaken to understand and appreciate the work that has been done up until this point, the current

technology, and the issues and problems. It forms a basis for the design, as it provides a reference point from which the design will begin.

2. Potential wind energy sites in regional Queensland will be investigated, and a target location selected at which the project will be planned to be implemented. The project is intended to be located in a regional area of Queensland where there is a need for such a device. Assessing the available power in the wind is important in selecting a site. The selected site will have adequate wind to generate the 1kW design output power.
3. The SWT system components and functions will be investigated, identifying the latest technologies and their limitations. Further to the background research, the investigation of components and their functions, in particular the latest technologies will help to narrow down the starting point for the design. Conceptual designs will be developed from this point, and this will form the basis of the technical analysis and complete design. The design of certain components is beyond the scope of this project, and as such, these components will be selected on the basis of their specifications and cost. The two major components that will not be designed are the rotor blades and the generator. Most other components will be designed, and where necessary, analysed for structural integrity using finite element analysis (FEA).
4. A suitable design will be developed based on the target location and the current leading technologies. Calculations of the required specifications of all the components will be undertaken, and conceptual design ideas finalized.
5. A Cost Benefit Analysis will be performed to assess the economic feasibility of the design. To be competitive in the market, the overall cost will need to be comparable to similarly specified turbine designs. The cost will also need to be competitive with other forms of energy, including other renewable forms, as well as conventional grid-connected electrical power.
6. The design implementation will be planned, and a working three-dimensional (3D) design developed using a parametric modelling software package. An FEA software package will be used to analyse designed components.
7. The implementation of the design, including installation, operation, maintenance, serviceability and decommissioning, will be investigated. As a part of the SWT design, it is important to investigate the life of the device after manufacture.

Installation of the turbine needs to be cost effective and relatively simple. Operation and maintenance will need to be trouble-free since the turbine is likely to be located in a remote location, and regular maintenance and operation issues need to be avoided. Serviceability and maintenance requirements will be included in the overall design. Decommissioning is an important area to address – at the end of its life the turbine needs to be effectively removed from the location, and possibly updated and recommissioned.

1.1 Conclusions

The need for this project has been identified from two global issues – climate change and finite fossil fuel supplies. These issues arise from an increasing urgency for sustainable energy practices to be developed and implemented, and the need to improve living standards in off-grid communities by improving energy services.

This project aims to enable the implementation of a remote wind energy conversion system, and specifically targets communities in regional Queensland where there is potential for the wind turbine to facilitate social, economic and environmental advancement. This will be achieved by investigation, planning and design of a small wind turbine design, a study of the social, environmental and economical impacts, and a Cost-Benefit Analysis. The scope of this study is detailed in Section 1.3.

The research is expected to result in some general and technical outcomes. The general outcomes include contribution to a current and global problem, the potential to create a marketable product, and a platform for further research. The technical outcomes are related to the performance of the designed SWT, and the total cost.

A review of literature for this research will identify the background information upon which the design will be based, the current technical information to ensure the design utilises the latest technology and ideas, and the social, economic and environmental issues related to the SWT design.

The outcomes of this study will be used for the design and development of a working 3D assembly, with approximated outputs and specifications, and a cost that will be compared with similar devices, and other forms of energy.

Chapter 2 Literature Review

2.1 Introduction

This chapter will review literature to establish the need for the design of a small wind turbine, and to provide background information required to gain an appreciation of SWT development.

After introducing the concept of basic human energy requirements, a historical perspective on increased human energy consumption will be examined. This will be supported with an identification and classification of the different sources of energy used today. The important differences between renewable and non-renewable energy forms will be highlighted.

The primary drivers of the renewable energy industry will be discussed, with considerable perspective provided for the differing arguments on climate change, and its causes and effects. The need to replace non-renewable energy supplies with renewable forms will also be addressed.

Arguments concerning the advantages and disadvantages of researching renewable energy technologies will be investigated to gain perspective on the different feelings towards the technology. Wind energy will be introduced as a viable and competitive renewable energy source, and its advantages will be discussed. Then, after looking at the latest policies and objectives of the Australian government with respect to renewable and wind energy, the current initiatives will be explored.

Finally, a brief appreciation of the history of wind energy will be conducted, followed by an analysis of the current small wind turbine technology and market. A broad look will be taken at the social, political, environmental and economic issues that surround most small wind turbine projects to highlight the importance of factors beyond the technical design that could make or break a proposed installation. This chapter will conclude with an overview of the information discussed, and the direction that will be taken in this project.

2.2 Energy Sources

As defined in many introductory physics texts, energy is the ability of a physical system to perform work. In very general terms humans require the chemical energy provided by food to perform basic physiological processes involving the cardiovascular, neural, respiratory, digestive, renal and reproductive systems. Through the history of human development an increase in per capita energy consumption has occurred as necessity has been extended beyond the basic physiological processes. In the hunter-gatherer phase of human evolution basic necessities included such things as shelter, warmth and security. In the modern high-energy phase (Boyden 1994) necessities are far more diverse, such as entertainment, travel and transport, communication, sport and leisure, information transfer, education, health and hygiene. Many of these may be considered conveniences and indulgences rather than necessities. Regardless of this, modern societies maintain a heavy reliance upon them, and the energy required to fulfil all modern needs has increased accordingly.

Figure 2.1 provides a historical view of human energy consumption, and importantly, the exponential increase in energy usage since the industrial revolution (Hau 2006). Prior to this period the major energy sources included oil and timber for heating and cooking, animal labour, and simple wind and water devices. During the industrial revolution technologies were developed that increased our ability to do work by converting energy sources such as coal, oil and gas into mechanical and electrical power, and these technologies quickly replaced traditional methods. The substitution of earlier energy sources with centralised power production from coal-fired plants, intensified by increasing populations in developing nations, led to a rapid escalation of human energy consumption. A significant reduction in the growth of human energy consumption is not likely to be witnessed in the near future.

Current energy resources are identified by Schlager and Weisblatt (2006), who recognise the dominant energy sources for most developed nations as coal, oil and natural gas. The high consumption rate of these fuels is mostly due to the development of technologies that use these energy forms, a trend that has continued to occur since the industrial revolution. Nuclear energy, a relatively modern alternative, is also a major source for some countries. Less common energy resources include biofuels, geothermal energy, solar, water, wind and hydrogen. The latter are known as renewable energy resources, defined by Sorensen (2004) as energy flows which are replenished at the same rate as they are used. Currently only 12.7 percent of the total global energy supply comes from renewable resources (IEA 2007).

This share of renewable resources in the total global supply is expected to be driven higher by significant world issues, namely climate change and finite fossil fuel supplies.

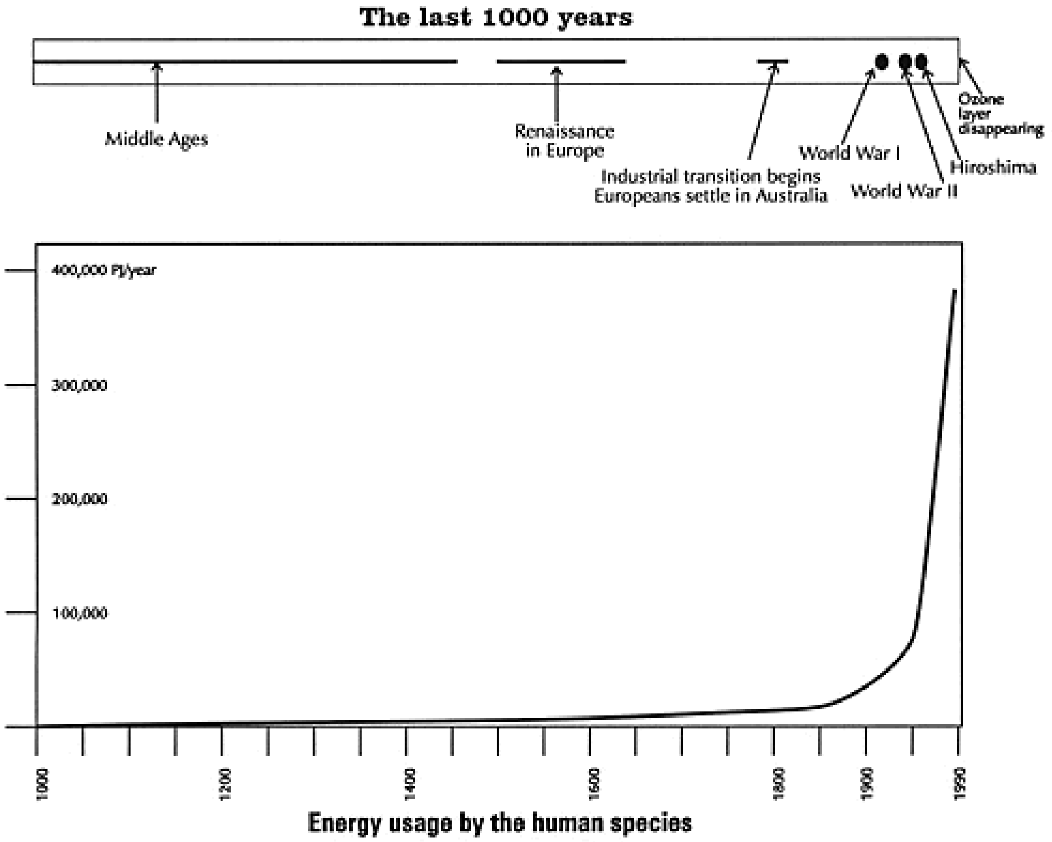

Figure 2.1 – Plot of historical human energy consumption (Hau 2006)

2.3 Drivers of Renewable Energy Sources

2.3.1 Climate Change

Scientific opinion on climate change revolves around two major factors, namely, anthropogenic causation and predicted impacts. While these two arguments are very much independent of each other, the proponents for anthropogenic causation of climate change also tend to argue that the impacts of global warming will be mostly negative. Similarly, the opponents of anthropogenic causation are often associated with those that believe positive effects are more probable. These two issues will be discussed here separately.

Anthropogenic climate change is the theory that human activity has caused global warming. Debate over this theory is important, as the outcomes will drive future decisions of leaders and policymakers. In turn this will influence the future directions of energy industries worldwide. The flow-on affects will be felt by other industries, businesses, research organisations and individuals.

The Working Group I Summary for Policymakers, as a part of the Fourth Assessment Report (AR4) of the Intergovernmental Panel on Climate Change (IPCC 2007), concludes that:

> "Warming of the climate system is unequivocal."
>
> "Most of the observed increase in global average temperatures since the mid-20th century is very likely due to the observed increase in anthropogenic greenhouse gas concentrations."

The IPCC is the body responsible for scientific and technical assessment of the state of knowledge of climate change. Funded by the World Meteorological Organization (WMO) and the United Nations Environment Programme (UNEP) the IPCC was set up in 1988 in response to governmental concerns and uncertainty regarding the implications of anthropogenic climate change. As a global, independent and unbiased body, the conclusions of the IPCC in its assessment reports are highly regarded. It is now generally accepted that there is scientific consensus on the issue of anthropogenic climate change, and the views held by a large number of national scientific organisations, including Engineers Australia, are in agreement with those of the IPCC.

Critics of the IPCC and its work dispute the legitimacy of information that is gathered by scientists, yet reported by teams that are also represented by governments. The actions of Dr. Chris Landsea serve as one example. After contributing to earlier IPCC assessment reports, Dr. Landsea withdrew his input to AR4 stating that the development of the report was being influenced by “pre-conceived agendas" and was therefore "scientifically unsound” (Landsea 2005). Dr. Landsea’s claims stemmed from an incident involving the lead author of the AR4 section on Observations, in which the lead author addressed the media on the topic “Experts to warn global warming likely to continue spurring more outbreaks of intense hurricane activity”. Having been directly involved in this research, and in disagreement with the lead author’s claims, Landsea asserted that this was a "misrepresentation of climate science while invoking the authority of the IPCC". His concerns were dismissed by IPCC leaders.

An interesting hypothesis that has recently been proposed is that the consensus view of anthropogenic climate change is now so ingrained in the ethos of the scientific community that to disagree with the majority is to risk losing funding, work and credibility amongst peers. One publication that conducted a survey of 928 peer-reviewed papers containing the search term “climate change” observed that, remarkably, none of the papers disagreed with the consensus position (Oreskes, 2004).

Greenhouse gases (GHGs) are naturally present in the atmosphere, and are crucial to keeping Earths temperature within a range that can continue to sustain life. Water vapour (H_2O), carbon dioxide (CO_2), nitrous oxide (N_2O), methane (CH_4) and ozone (O_3) are the primary GHGs in the earth’s atmosphere (BOM 2003). The natural greenhouse effect is a process by which the incident solar radiation is emitted, reflected and absorbed by the earth and its atmosphere. The net effect of this “heat equation” is the maintained temperature on earth.

Thus, the issue of climate change does not concern the presence of GHGs, but rather, the increased concentration of certain GHGs due to human activities, and the potential effects. This is known as the enhanced greenhouse effect, and it is this argument that is maintained by proponents for anthropogenic climate change. Figure 2.2 (BOM 2003) shows the increase in CO_2, N_2O and CH_4 over the last 1000 years, and also shows the warming effect of each gas through the concept of radiative forcing. According to the BOM (2003) radiative forcing is a measure of the net vertical irradiance due to a change in the internal or external forcing of the climate system, such as a change in the concentration of carbon dioxide or the output of the sun. The positive radiative forcing indicates that a warming effect is occurring. Continued burning of fossil fuels is expected to increase the levels of GHGs in the atmosphere, resulting in an increase in radiative forcing, and consequently, higher average global temperatures. An interesting observation from Figure 2.2 is the similarity of the curves to that shown in Figure 2.1, possibly showing a correlation between human energy consumption and rising GHG levels.

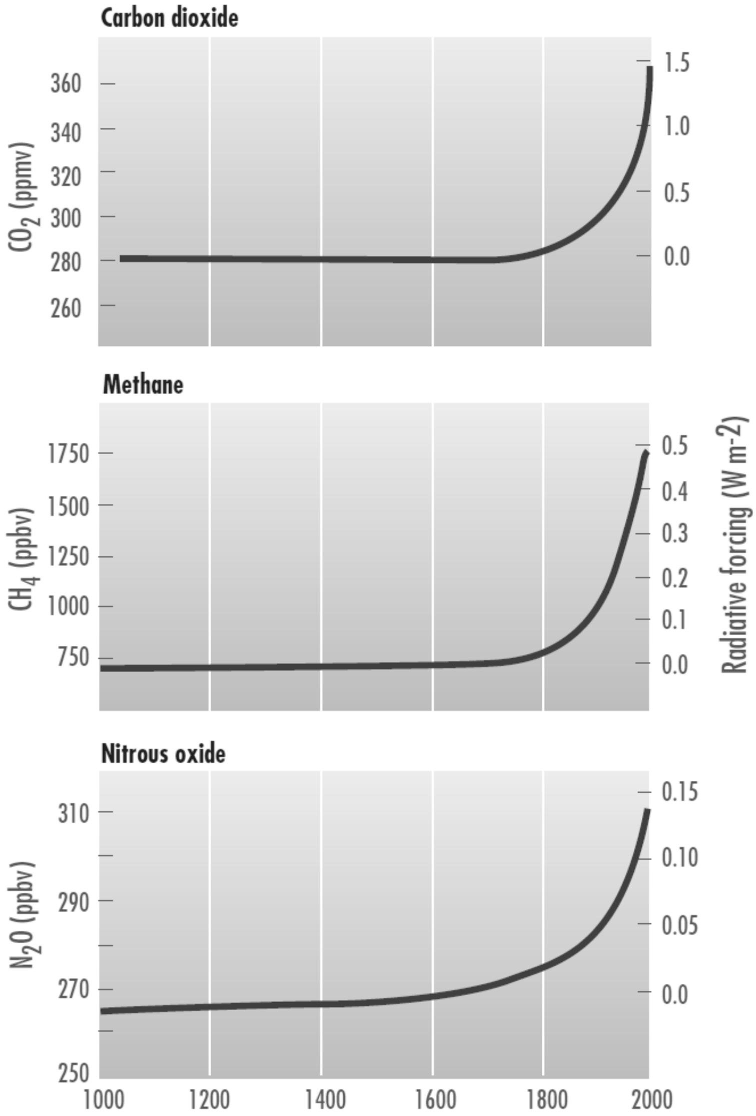

Figure 2.2 – Trends in atmospheric concentrations of GHGs over the last 1000 years (BOM 2003)

There are also natural processes occurring that affect the global climate system. Opponents to the view of anthropogenic climate change argue that these processes have a greater impact on climate patterns than any human activities. Climate scientists concur that the following natural processes affect the earth's climate, but no unanimity exists in scientific opinion on the degree to which these natural processes have an affect (BOM 2003):

- Fluctuations in solar output
- Fluctuations in the rate of rotation of the earth
- Volcanic eruptions
- Changes in land and ocean floor topography
- Internal oscillations of the climate, such as El Niño

Dr. Syun-Ichi Akasofu, a founding member of the International Artic Research Centre, suggests that the "Little Ice Age" (LIA) could be responsible for what he describes as a linear increase in earth's temperature over the last 100 years (Akasofu 2007). The LIA was a period of cooler global temperatures somewhere around the 14th and 15th centuries, through to the mid-19th century. Several IPCC contributors have refuted this claim.

Due to the complexity of ecosystems, the effects of an increasing average global temperature are extremely difficult to predict. Moreover the extensive range of anticipated impacts means that scientific research into climate change effects is rife with claims and refutations. The effects are generally categorised as either direct effects, or positive or negative feedbacks. Positive feedbacks occur when the influence of one climate-related process, such as increased temperature, drives another process that in turn amplifies the first. Conversely a negative feedback is one in which a climate-related process causes a secondary one to reduce the original. A simple example of a direct effect of temperature increase is the melting of polar ice caps. An example of a positive feedback of the same process would be a reduction in ice cover, which results in a decrease of reflected solar radiation, thus leading to further temperature increases. On the other hand, rising temperatures are predicted to cause increased cloud cover in certain regions, which may result in local temperature decreases (AGO 2003a).

For the most part, the scientific legitimacy of arguments for and against the negative impacts of climate change is indisputable. Both sides recognise the complexity and interconnectivity of climate processes, so the magnitude of the predicted effects is the focus of debate. Proponents for negative impacts of climate change arguably hold a consensus opinion, which is once again led by the IPCC, and supported by most scientific research institutions and bodies worldwide.

The Working Group II Summary for Policymakers, as a part of the IPCCs AR4, outlines the impacts of climate change in an Australian and New Zealand setting. The predicted impacts include (IPCC 2007):

- Reduced precipitation and increased evaporation resulting in intensified water security problems in certain regions
- Significant loss of biodiversity in ecologically rich areas such as the Great Barrier Reef, Queensland Wet Tropics and Kakadu
- Increased severity and frequency of storms, and coastal flooding
- Declining production from agriculture and forestry due to increased drought and fire

These predictions have not been refuted explicitly for the Australian context.

Further to these specific impacts, a report by the Australian Greenhouse Office identifies general areas likely to be affected by climate change (AGO 2003a):

- Water Supply and Hydrology
- Ecosystems and Conservation
- Agriculture, forestry and fisheries
- Settlements and industry
- Human health

The arguments against negative impacts generally contest these more general climate change effects. In the Garnaut Climate Change Review: Draft Report (Garnaut 2008), Professor Ross Garnaut quotes Steffen and Canadell (2005) in regard to the positive impacts of climate change. Steffen and Canadell, and other prolific researchers such as Sherwood Idso, the President of the Center for the Study of Carbon Dioxide and Global Change, argue that increases in CO_2 concentration (CO_2 enrichment) can stimulate plant growth by increasing the rate of photosynthesis, which may improve the health-promoting properties of foods. While Garnaut acknowledges this research, he also draws attention to organizations whose studies oppose these views by arguing that increased severity of extreme weather conditions, pestilence, fire, and drought are likely to outweigh the benefits of CO_2 enrichment.

2.3.2 Finite Energy Supplies

The issue of global climate change is undeniably significant, and it is already having an impact on future energy trends. Regardless of the debates surrounding this controversial issue, there remains the simple matter of the finite nature of non-renewable resources. Fossil fuel supplies will not be exhausted "tomorrow", but in spite of this alternatives need to be gradually phased-in as substitutes for dwindling supplies. The basic economic principle of supply and demand will continue to drive fossil fuel prices higher, and at some point in time (if not already) the cost of using renewable energy forms will fall below the cost of fossil fuels. Additionally, as renewable energy technologies improve through scientific and engineering R&D, and consumers become increasingly aware of the products available, alternative energy sources will gain significant market share.

2.3.3 Benefits of Renewable Energy Sources

Non-renewable energy sources are a fundamental requirement for meeting current Australian energy demands. There are obvious environmental advantages in using renewable energy sources, such as climate change mitigation and reduction in dependence on finite resources. But substituting current energy sources with renewable forms is not likely to be an achievable short-term objective, given that Australia's total energy consumption is approximately 5770 PJ (Petajoules = 10^{15} J) and that renewable energy accounts for only 5.16 percent of the current total consumption, and 1.75 percent of current total energy production (ABARE 2008). Figures 2.3 and 2.4 show the current mix of energy production and consumption respectively.

Devices that utilise renewable energy are intended to reduce GHGs, but at present, the energy needed to design, manufacture and install these machines primarily comes from non-renewable resources. It is commonly argued - and strongly denied - that renewable energy devices are not able to compensate for the energy consumed in manufacturing them, over their useful lifetime.

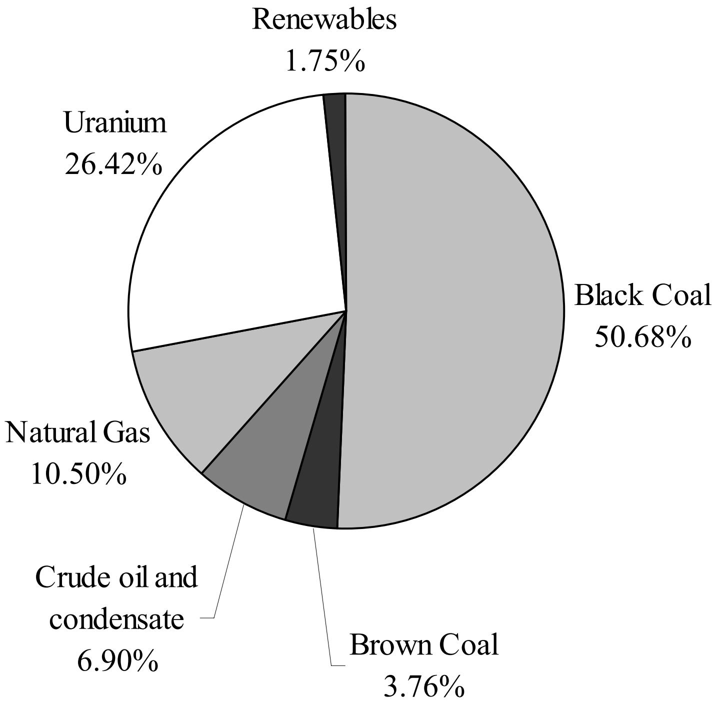

Figure 2.3 – Australian energy production by fuel type (ABARE 2008)

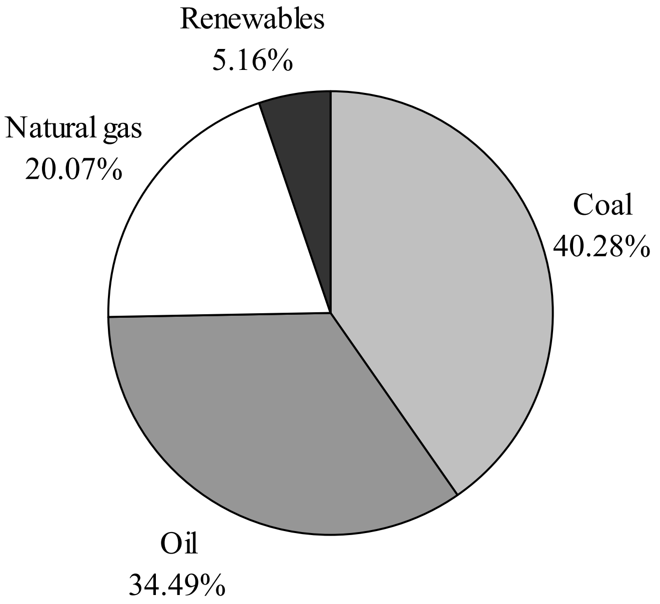

Figure 2.4 – Australian energy consumption by fuel type (ABARE 2008)

One of the major aims of establishing renewable energy technologies as the primary energy producer in Australia is to reduce dependence on finite resources, particularly from foreign importation. There is enough variety in the types of renewable energy sources to make this viable, with power supplies for both moving (transport) and stationary (industry, commercial and residential) plant. The reliability and quality of the supplied power is presently a greater issue than the question of whether or not renewable energy can meet current and future demands. Technologies are available that could potentially supply base, intermittent and peak energy loads, but until a substantial and diverse range of large-scale renewable energy plants are in operation, these loads could not be met reliably and consistently. The unpredictable and intermittent nature of weather systems, which directly influences renewable energy production in most instances, means that an energy supply from renewable forms would currently be somewhat unreliable and have low quality in terms of meeting instantaneous energy demands.

The economic benefits from decentralisation of power production such as local employment, and grid-independence, offset the high initial cost of renewable energy installations. In some instances where liquid hydrocarbons are used as the energy source, such as diesel generators, the initial cost of a renewable energy system plus the ongoing maintenance costs may at present be less than the cost of a non-renewable supply with maintenance and fuel costs. Renewable energy also provides cost stabilisation as the technology improves and the market becomes more competitive. This is in contrast to devices that use fossil fuels, whose running costs will be dictated by the price of the oil, which is continuing to rise sharply.

In general, the long-term benefits of developing renewable energy technologies and increasing their contribution to national energy production exceed the current issues and disadvantages, particularly in the abatement of negative climate change effects.

2.3.4 Government Initiatives

The Australian Government recently showcased its commitment to mitigating global warming with an advertising campaign encouraging Australians to “Think Climate. Think Change” (DCC 2008a). Beneath the gloss of the awareness promotion are initiatives aimed at addressing the climate change issue from several fronts. These include schemes to reduce GHG emissions, education to facilitate improvements in energy efficiency in businesses and homes, studies into local climate change impacts, and research and development of renewable energy technologies. The Rudd government has set about achieving these goals by signing and ratifying the Kyoto Protocol, and commissioning the Garnaut Climate Change Review (DCC 2008a).

The Garnaut Climate Change Review, more commonly known as the Garnaut Report, is due to be submitted to the government in September 2008, and is an economic analysis of the impacts of climate change. It will also include policy and policy framework recommendations to provide direction for economically and environmentally sustainable development and growth in Australia. In response to the recommendations of the draft Garnaut Report, the Carbon Pollution Reduction Scheme (CPRS) Green Paper (DCC 2008b) has been prepared to address CO_2 emissions by the different sectors of the economy. The purpose of the scheme is to control emissions of CO_2, while protecting businesses and households from the economic impacts of the national transition to a low-emission future (DCC 2008b). The scheme sets limits on emissions, but allows trading of carbon credits in a free market. This gives businesses the option to either reduce their emissions to meet their carbon cap, or purchase carbon credits to extend that limit. This will effectively put a dollar value on CO_2 emissions, increasing the accountability of businesses, and thereby providing incentives to meet emission limits. The scheme makes national emissions targets achievable. Australia’s requirements under the Kyoto Protocol are to limit GHG emissions to 108 percent of 1990 levels during the period of 2008-2012, and to provide evidential reports of annual emissions (DCC 2008a).

The Mandatory Renewable Energy Target (MRET) is a national scheme that has been introduced to increase the share of electricity production by renewable energy sources (ORER 2008a). Using 1997 as the base year for calculation, the scheme aims to achieve an extra 9500 gigawatt hours (GWh) of electricity by 2010. MRET, under the regulation of the Office of the Renewable Energy Regulator (ORER), imposes a legal liability on large wholesale purchasers of electricity, to support renewable energy electricity (ORER 2008a). The scheme utilises tradable Renewable Energy Certificates (RECs) that represent one megawatt hour (MWh) of renewable generation. Similar to the carbon trading scheme, the RECs can be bought and sold on a free market, to provide incentives for renewable energy generation. Small Generation Units (SGU) such as small solar, wind or hydro devices, are also eligible to create RECs in many cases, providing economic incentive for small-scale generation. Figure 2.5 shows the proposed share of electricity generation from renewable energy in 2020, under the MRET initiative (AGO 2003b).

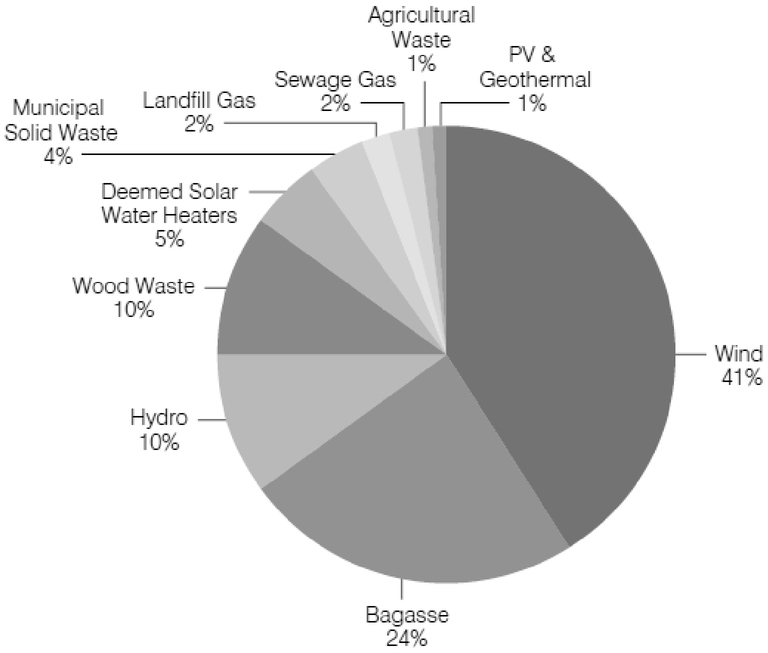

Figure 2.5 – Proposed 2020 renewable energy generation mix, by fuel type (AGO 2003b)

Further incentives to develop renewable energy sources in Australia are provided through government funding. The Renewable Energy Equity Fund (REEF) was established to provide venture capital for innovative renewable energy small businesses. The Australian Government's Renewable Remote Power Generation Program (RRPGP) provides financial support to increase the use of renewable generation in remote parts of Australia that presently rely on fossil fuel for electricity supply (DEWHA 2008).

The Queensland Government has also been proactive in promoting its “Climate Smart” initiatives, which include (Queensland Government 2008):

- Investment in clean coal technologies
- A renewable and low-emission energy target of 10 percent by 2020
- Funding for climate change research and renewable energy technology developments, including the Queensland Sustainable Energy Innovation Fund (QSEIF)

2.4 Small-Scale Wind Energy

2.4.1 Introduction

Wind is one form of renewable energy that has the potential to add to the national energy supply. Global winds are caused by pressure differences across the earth's surface due to the uneven heating of the earth by solar radiation (Manwell, McGowan & Rogers 2002) and the Coriolis Effect of Earth's rotation. As a form of renewable energy, wind is an alternative energy source that is being driven by the issues of anthropogenic climate change and finite fossil fuel reserves. Government incentives are also increasing the share of wind energy in the national energy mix, and encouraging the development of improved wind energy technologies.

Australia has substantial wind resources. The southern coastlines of mainland Australia, as well as Tasmania, lie in a zone known as the Roaring 40's, so called because of their latitude. Northern Australia also experiences monsoon and trade wind systems (southeast trades) (Coppin, Ayotte & Steggel 2003). Topographical features like the Great Dividing Range also influence local wind patterns. Mills (cited in Coppin, Ayotte & Steggel 2003) has produced an atlas of wind resources for Australia based on coarse resolution wind modelling output, combined with empirical relationships to allow for surface features (see Figure 2.6).

Queensland's wind resources are not as plentiful as the southern coastline and northern tips. Additionally, highly variable climatic conditions such as seasonal cyclones along the eastern tropical coastline produce irregular and unpredictable wind strengths. While high resolution wind mapping has recently become available for New South Wales (NSW) and Victoria, specific regional wind strength profiles are yet to be provided for Queensland. Recent research by the Commonwealth Scientific and Industrial Research Organisation (CSIRO) Wind Energy Research Unit (WERU) has identified significant wind energy sites across the country (Coppin, Ayotte & Steggel 2003).

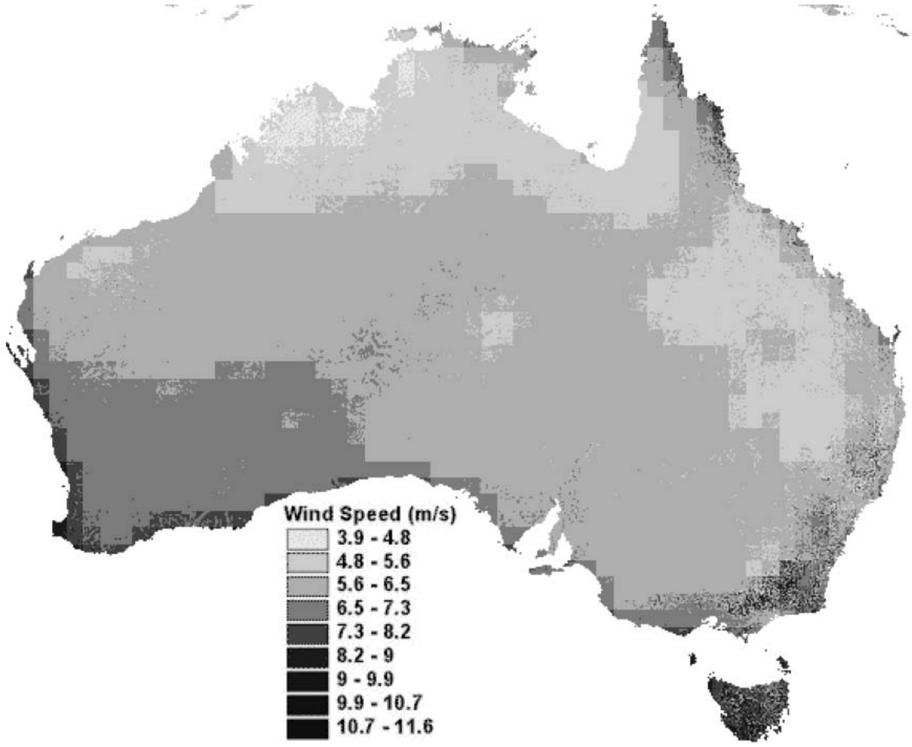

Figure 2.6 – 70m wind speeds for the period May 1997 – April 1999 (Mills 2001 (cited in Coppin, Ayotte & Steggel 2003))

2.4.2 Background

The earliest records of devices that harnessed the energy in wind to do work date back to the 1st century A.D. through the Middle East and mainland Asia (Hau 2006). These were typically vertical axis drag-type devices that were used to grind grains, foods and spices, or to dry out rice fields. Early in the 2nd century A.D. a different type of wind device was independently invented by the Dutch. These windmills had a similar purpose to those in Asia. Reclamation of land, by draining bodies of water, was particularly important in the Netherlands, and it was through this need, along with other common uses, that the windmill underwent significant development. The technology spread through Europe, and by the middle of the 19th century there were an estimated 200,000 windmills across Europe (Hau 2006).

Although a considerable amount of progress was made through empirical methods, scientific research and development also facilitated numerous improvements in wind turbine design. Key historical figures such as Newton, Bernoulli, Euler and Coulomb contributed directly to the advancement of technology through the studies of the laws of physics, calculus, and fluid mechanics.

By the beginning of the industrial revolution, wind turbine technology incorporated many of the features that are common in turbines today, including (Hau 2006):

- Automatic yawing (or rotation) of the turbine into the wind
- Aerodynamic design of blades, including an understanding of the mechanisms of lift and drag
- Transfer of mechanical (rotational) energy through drive trains, to deliver mechanical power for multiple purposes
- Speed and power regulation through adjustment of the blades or sails

The introduction and widespread use of the steam engine made windmills somewhat redundant, but despite this, developments in wind energy technology continued. Around 1890 La Cour undertook investigations into the aerodynamics of sails, and is attributed with comprehensively analysing and describing the rudiments of windmill technology, as well as generating electricity to create hydrogen (Hau 2006). In 1920 Albert Betz formulated the very fundamental physical principles of wind energy conversion that are used in the modern age. During the same period, American inventors such as Halladay and Wheeler developed unique windmill designs that were used for pumping water, particularly in rural areas. According to Hau (2006) approximately 6 million American wind turbines were manufactured by 1930. Rural electrification during the middle of the 20th century caused windmill production to abruptly decline, though the American windmill remains a common, and now iconic, feature in rural landscapes across many parts of the world including regional Australia (Figure 2.7).

To remain competitive with easier forms of energy such as coal and oil, wind energy trended towards large-scale production. The industry was rejuvenated after the oil crisis of the 1970’s (Manwell, McGowan & Rogers 2002), when oil price increases prompted people to look for alternatives. The vast majority of power produced by modern wind turbines comes from large wind farms, megawatt machines and offshore sites. Huge advances in turbine design, made easier by computer-based design, improved materials and greater understanding of the wind as a resource, have secured wind energy as a highly competitive source of energy for many nations.

Figure 2.7 – Rural windmill (State of Environment Townsville 2008)

With recent environmental concerns and increasing fossil fuel prices, wind turbines are likely to play a larger role in many nations' energy production plans. The expansion of the wind energy industry allows niches to emerge, in particular the small wind turbine market. The development of SWTs is a very recent occurrence, yet already there are several companies with sophisticated products.

2.4.3 Current Technology

SWTs are generally classified as having an output power of less than 100 kW. The smallest units generate about 50 W, and are often used for educational purposes. The Australian Standard for SWT design, AS61400:2006, defines SWTs as those having a swept area less than 200 m² (Standards Australia 2006). This equates to a rotor diameter of up to 16 m. Further classification of SWTs is by the orientation of the rotor axis, and the aerodynamic principle employed, that is, lift or drag. An array of different design configurations have been developed, such as those shown in Figure 2.8 (Manwell, McGowan & Rogers 2002).

The orientation of the rotor axis with respect to the ground is normally either horizontal or vertical. Horizontal-axis wind turbines (HAWT) are the most common designs, with two or three-bladed, upwind designs most prominent. Savonius and Darrieus designs dominate the available vertical-axis wind turbine (VAWT) products. Figure 2.9 shows an example of each of the three major SWT designs.

The different HAWT and VAWT designs make use of the aerodynamic principles of drag and lift. Drag and lift forces on a body immersed in an oncoming fluid flow, are the forces acting on the body in the directions parallel and perpendicular to the flow, respectively. Rotors using aerodynamic lift achieve higher power coefficients than drag devices. The power coefficient is the ratio of the extractable mechanical power to the power contained in the air stream (Hau 2006). Normally, HAWTs utilise aerodynamic lift, although other drag-type designs exist. Savonius turbines are drag-type devices, while the Darrieus design uses lift.

Figure 2.10 (Hau, 2006) shows the ideal power coefficient for common wind turbine designs. From the figure, it is apparent that HAWTs are the most efficient with a power coefficient of about 0.49. Darrieus turbines achieve a maximum power coefficient of about 0.4, while Savonius designs typically only reach 0.15. Despite the differences in efficiency, each design has its benefits and drawbacks. All turbines need to be positioned as high as possible, but VAWTs allow the generator to be located at ground level. VAWTs are generally quieter than HAWTs, and do not need to yaw into the wind (Webb 2007).

Due to their superior efficiency, and the wealth of knowledge available, this project will focus on the design of a conventional three-bladed, horizontal axis, lift-type small wind turbine. The term SWT herein will refer to this type of design.

SWTs require the following fundamental elements for useful wind energy conversion:

- Rotor – to convert the kinetic energy of the wind into rotational energy
- Generator – to convert the rotational energy into electrical energy

The rotor is comprised of the blades and the central hub to which they are attached. The diameter of the rotor, which is the circle scribed by the blade tip, is a defining characteristic in the amount of power that can be extracted from the wind. Generators use the principle of electromagnetic induction to convert mechanical energy to electrical energy.

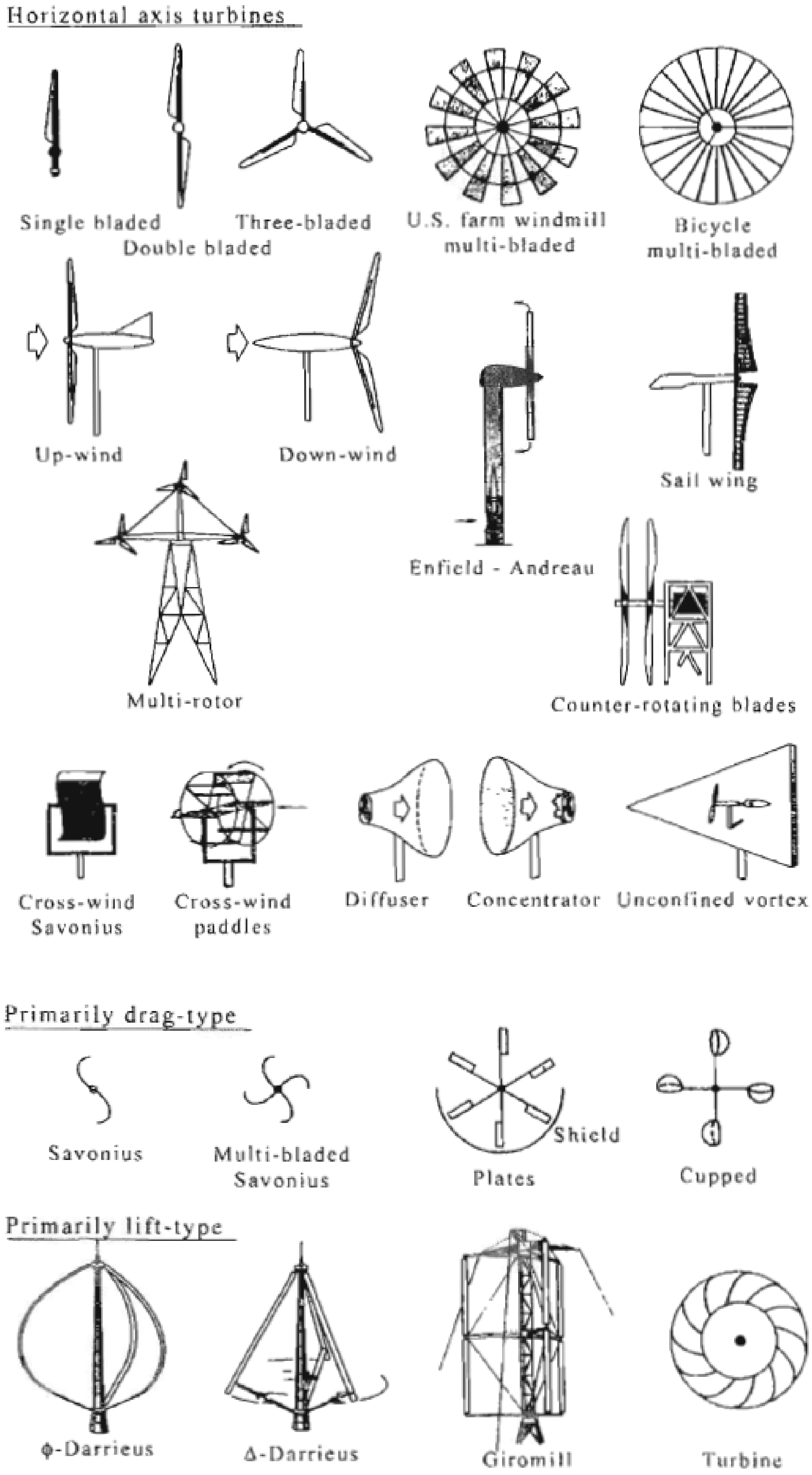

Figure 2.8 – Variety of wind turbine configurations (Manwell, McGowan & Rogers 2002)

2.9(a) 2.9(b) 2.9(c)

Figure 2.9 – Images of (a) HAWT, (b) Darrieus and (c) Savonius configurations (Webb 2007)

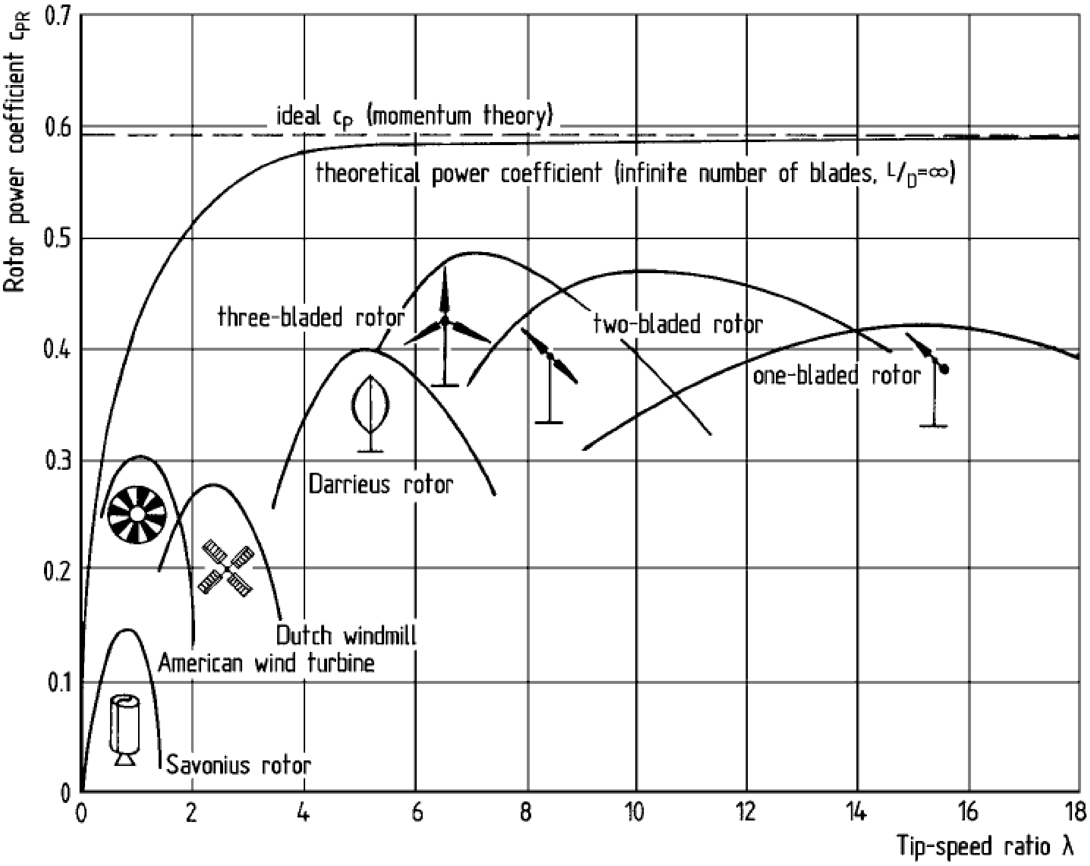

Figure 2.10 – Power coefficient vs tip speed ratio for a variety of turbine configurations (Hau 2006)

Further to the basic components, a modern SWT system comprises the following components:

- Tower and foundation – provides stability for the turbine in high speed winds, and elevates the turbine to a height where wind speeds are high enough to generate the rated power.
- Yaw mechanism with tail – turns the SWT into the direction of the wind so that the rotor can operate most effectively.
- Furling mechanism – a mechanical means of power control, whereby the turbine turns away from winds that exceed a permissible limit.
- Slip rings and electrical cabling – transmits the generated electricity from the turbine at the top of the tower, down to the energy storage or conversion system at the base.
- Energy storage or conversion system – In many applications batteries are used to store the generated electricity, while often an inverter is used to convert the generated electricity to a form suitable for grid-connection.
- Electrical control system, with over-speed and lightning protection – electronic control of the rotor speed ensures that the turbine does not destroy itself in extreme wind conditions.

Current SWT research and development is focused on the following areas identified by the American Wind Energy Association (AWEA 2007), and the National Renewable Energy Laboratory (NREL 2008):

- Advanced blade design, materials and manufacturing methods
- Low wind speed operation to reduce the threshold for cut-in wind speed
- Alternatives to furling
- Slower rotor speeds to reduce sound levels
- Integrated inverters
- Rare earth permanent magnet and induction generators
- Designing electronics to meet stronger safety and durability standards
- Wind tunnel aerodynamic testing

- Numerical modelling of wind resources and national wind mapping
- Finite element analysis (FEA) of components, and designing for fatigue
- Numerical analysis of fluid flow

The major objectives of the current research are to generally facilitate the design of more efficient, reliable, serviceable and economical turbines. In Australia there are several universities that are pursuing SWT research outcomes, including the Universities of Adelaide, Sydney and Newcastle, as well as Murdoch University in Perth.

Dr Philip Clausen and Associate Professor David Wood, of the University of Newcastle, are leading figures in the Australian SWT research field. Clausen and Wood have undertaken extensive work on SWT blade design, including fatigue testing, aeroelastic response, structural and dynamic performance, and FEA analysis (University of Newcastle n.d. a, University of Newcastle n.d. b).

Government support of SWT research and development was recently demonstrated by the announcement of $1.05 million of funding to the Research Institute for Sustainable Energy at Murdoch University, for the construction of a national SWT test centre (Australian Government 2008). The facility is intended to expand Australia's SWT market by improving consumer confidence through certification and testing of prototype designs, and training for SWT designers.

2.4.4 Market

Along with increasing climate change awareness, the Australian SWT market is currently being driven by financial incentives from MRET and RRPGP schemes, as discussed in Section 2.3.4. The market is in its infancy, and there is no firm data to suggest that SWTs are having any great input to national energy production. The quantity of installed units is also uncertain.

The existing market barriers are primarily financial, but also relate to technical problems and public concerns. The large initial investment required is the major factor preventing more rapid market expansion, despite the availability of a variety of models from local and foreign manufacturers. Purchase prices remain high due to low production volumes and rising costs of raw materials such as copper and steel

(AWEA 2007). Consumers demand accurately predicted payback periods, to effectively compare SWTs with alternative sources of energy such as grid-supplied electricity, diesel generators and photovoltaic (PV) units, over the life of each system.

Technical issues are not greatly impeding turbine sales, but improvements through scientific, engineering and economic research are helping to make SWTs more competitive. Simplification of turbine designs is improving reliability and reducing maintenance requirements, while driving down the upfront cost (AWEA 2007).

Although public awareness of climate change is drawing attention to the benefits of SWTs, concerns also exist over issues such as safety, wildlife impacts, noise and visual amenity. These issues will be discussed in Section 2.4.5.

Demand for SWTs is mostly in regional off-grid locations. Market potential also exists in places that are within the distribution network, but where facilities are not connected to mains supply, such as a farm workshop. Figure 2.11 shows the extent of the electricity distribution network in Queensland (Ergon Energy 2008a). The thirty-three existing isolated generator units are also displayed. All but two of these units are diesel generators, one of the exceptions being the 450 kW wind farm on Thursday Island. The diesel systems are planned to be replaced with renewable energy devices. Figure 2.12 shows the location of potential renewable energy remote area power supplies (RAPS) in national parks and protected habitats across Queensland, according to the Queensland Government Environmental Protection Agency (EPA).

As SWT systems become increasingly economical, demand is likely to rise for off-grid and residential applications. An emerging residential market has the potential to provide enthusiasts with a sense of responsibility for personal energy consumption, and the health of the environment.

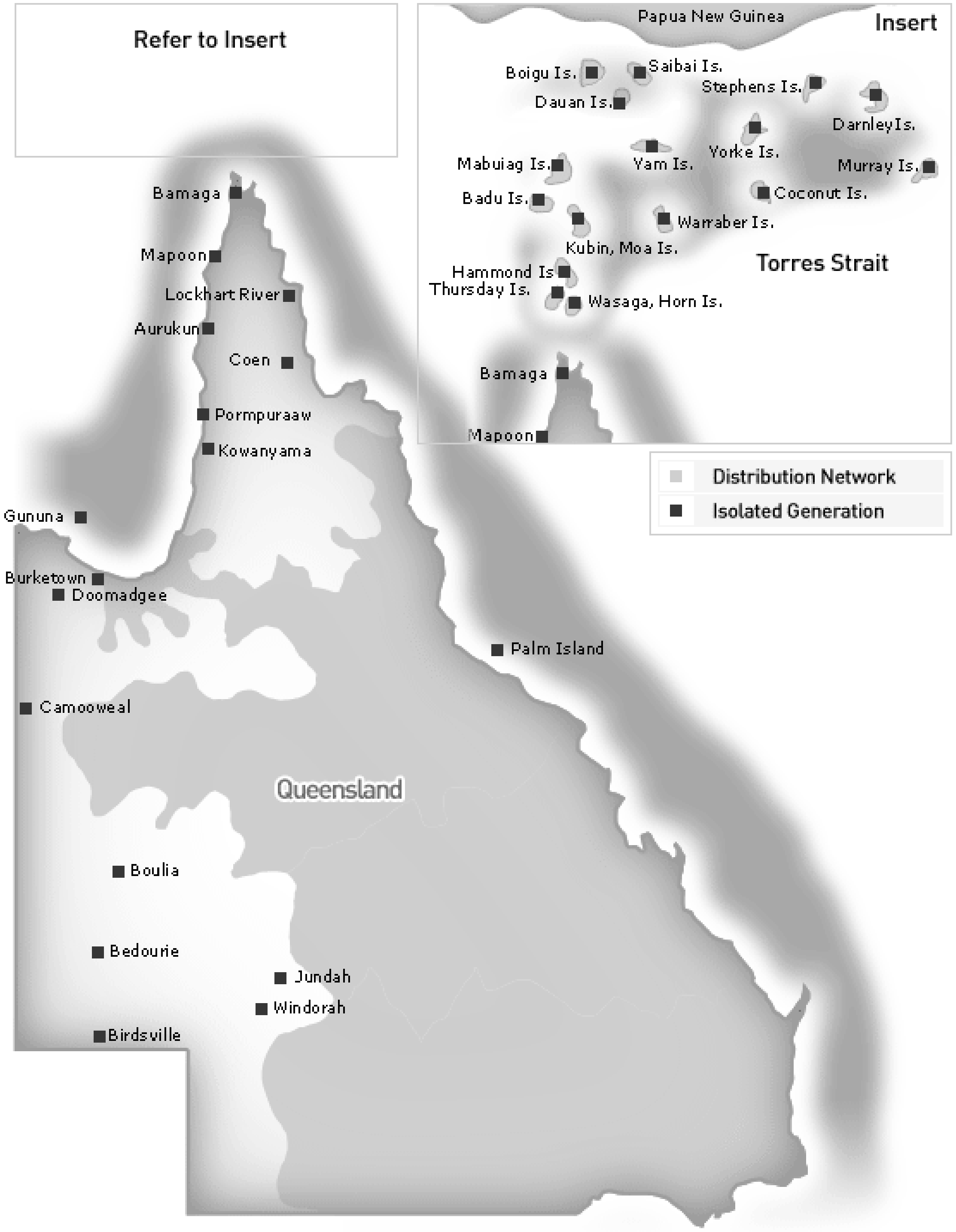

Figure 2.11 – Queensland Electricity Distribution Network (Ergon Energy 2008a)

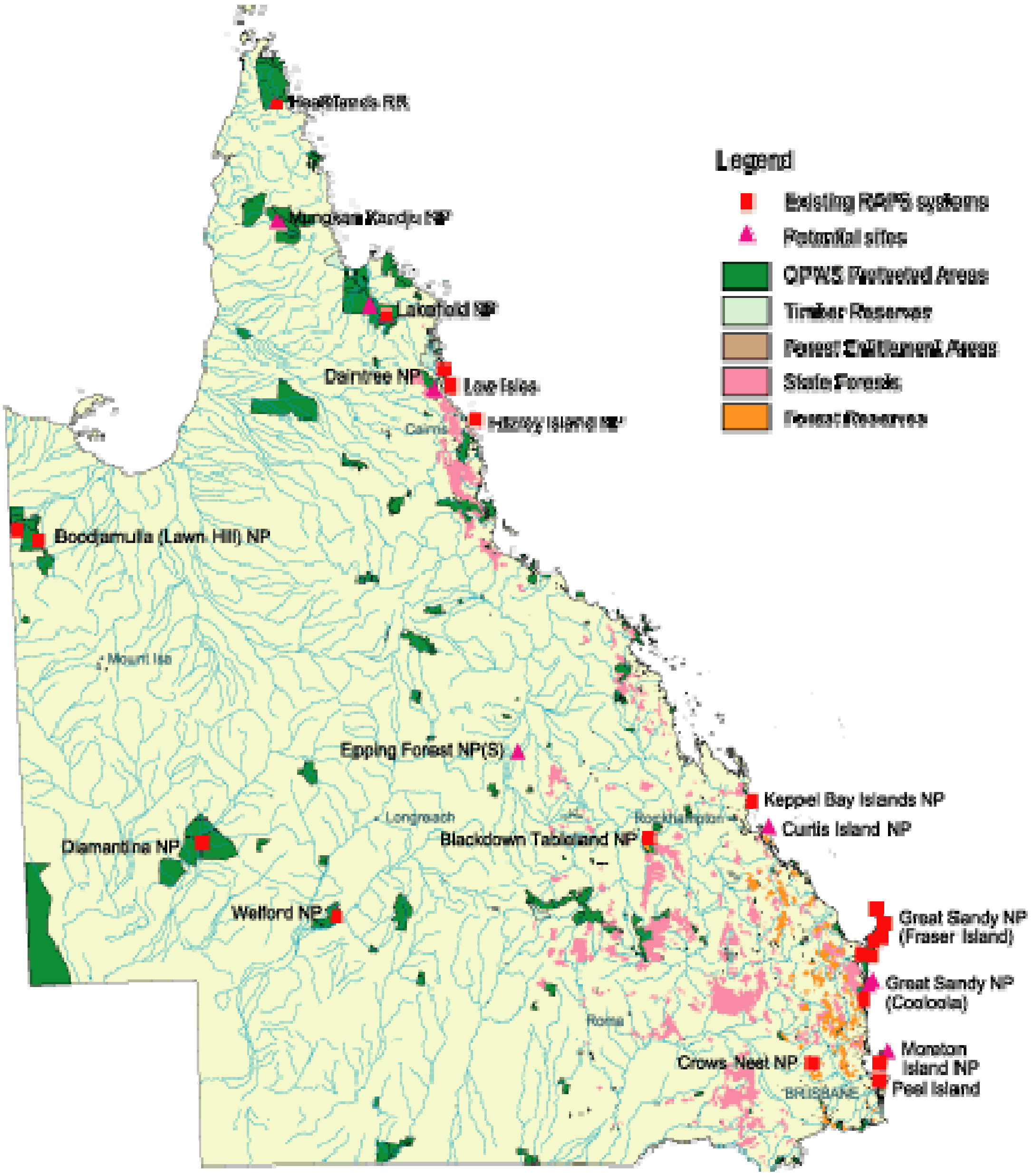

Figure 2.12 – Potential Renewable Energy Sites in Queensland (EPA 2007)

2.4.5 Issues

It is the ethical responsibility of an engineer to consider all of the conceivable issues associated with any new project and address them accordingly. For any proposed SWT installation there is likely to be a reaction from the local community. The responses will be largely predictable, given the abundance of literature available about wind turbine issues. Those that are most prevalent concern the social and environmental impacts. Normally these issues are associated with large wind turbines, especially in wind farms, but this does not necessarily mean that the negative effects of a SWT installation are any less significant. Moreover, this does not imply that public concerns will be reduced. By conducting appropriate technical studies into the significance of each issue, addressing the problems to minimize their impact, and providing accurate and consistent information to the public, concerns will be alleviated appreciably.

The social implications of a SWT installation are directly related to potential public disturbances. In 2005 an application was received by the Cambooya Shire Council (near Toowoomba, Queensland) for a SWT on a private property. The application was publicly advertised, and the community responses were discussed at a council meeting (Cambooya Shire Council 2005). The following concerns were raised about the proposed SWT installation:

- Unsightly and not aesthetically pleasing
- Detrimental to the amenity of the area and will cause a loss in value to neighbouring properties
- Excessive noise on windy days
- Affect on wildlife in the area

These issues represent the major concerns of most communities in response to SWT installations. Additionally, Manwell, McGowan and Rogers (2002) and Hau (2006) highlight other social issues that have been raised in the past, including shadow flicker, safety, electromagnetic interference and environmental concerns.

Further to the social and environmental issues, planning needs to be considered for each location. This section will conclude with a brief overview of the typical planning requirements for a proposed SWT installation.

2.4.5.1 Noise

Noise pollution is an inherent issue with wind turbines, but one that has seen extensive research in recent years, leading to a general alleviation of the problem. The noise produced by a turbine can be attributed to mechanical and aerodynamic factors. The simplicity of their design is a characteristic that affords SWTs fewer mechanical parts, and hence, less mechanical noise than their larger counterparts.

However, larger rotor speeds required to produce energy, mean that aerodynamic noise is increased.

A 2003 publication by the United States National Renewable Energy Laboratory (NREL) compared the results of a series of tests on SWT acoustic noise (Migliore, van Dam, Huskey 2003). Eight different turbines were tested, ranging from 400 W to 100 kW rated output. The measurements were made according to International Electrotechnical Commission (IEC) standards which took into account the wind direction and speed.

Of the tested wind turbines, the Bergey XL.1 produced the least acoustic noise, with an apparent sound pressure level unable to be recorded because the turbine noise could not be separated from the background noise. The Southwest Windpower Whisper H40 was the only turbine under 10 kW to record a sound pressure level above 65 dB(A) at a wind speed of 10 m/s. Table 2.1 (Burton et al 2001) is provided here to compare this sound pressure level with other sources of noise. Note that the wind farm listed in the table refers to a site with multiple, large wind turbines. The report concludes that in general, recent technical advancements have reduced turbine noise significantly.

Example	**Sound pressure level (dB(A))**
Threshold of hearing	0
Rural night time background	20-40
Busy general office	60
Inside factory	80-100
Jet aircraft at 100 m	120
Wind farm at 350 m	35-45

Table 2.1 – Examples of Sound Pressure Levels (Burton et al 2001)

2.4.5.2 Visual

The aesthetic value of a SWT is subjective, and thus not a measurable quantity. Designers of modern SWTs have given significant consideration to the visual characteristics of turbines. As far as possible these designs are intended to be sleek and modern, with colour schemes that blend into the natural background. Hau (2006) summarises the results of a Swedish investigation into the aesthetics of large wind turbines, which highlighted three factors affecting the visual impact:

- Negative psychological associations, such as a perceived danger, that may influence an individual's impression of the technology.
- Contrast/complement to the features of the surrounding landscape.
- Wind turbine height, where lower turbines are more easily disguised in the surrounding landscape.

Hau (2006) also identifies shadow flicker as a potential visual impact. Shadow flicker is the strobe-light effect of the shadow cast by the turning blades, and at certain times of the day could produce a significant visual disturbance. Thoughtful siting of the SWT would prevent this from becoming an issue.

2.4.5.3 Safety

Manwell, McGowan and Rogers (2002) identify that the primary hazards associated with wind turbines are related to the rotation of the rotor, the possibility of public access to potentially dangerous machinery, and the generated electricity. The identifiable hazards include (Manwell, McGowan & Rogers 2002):

a) Blade throw – failure of a blade may result in the blade being thrown.
b) Falling ice or thrown ice – in cold climates, accumulated ice also has the potential to be thrown from the blades.
c) Tower failure – most likely caused by extreme winds.
d) Attractive nuisance – the public may be curious, and want to touch, open, climb or otherwise interfere with the machine.
e) Fire hazards – particularly when the turbine is located in an arid and remote location where fuel may grow around the turbine uncontrollably.
f) Worker hazards – machine maintenance involves certain hazards, and these can be magnified if the person maintaining the machine is not a trained professional.
g) Electromagnetic fields – caused by the flow of a current through a conductor.

The risk of occurrence of each of the identified hazards needs to be assessed before the commencement of any installation. A thorough Risk Assessment evaluates all of the identifiable hazards and makes recommendations for the mitigation of each.

2.4.5.4 Electromagnetic Interference

Hau (2006) identifies electromagnetic interference of navigational or communication-related systems as a potential issue. According to Hau, turbine siting and rotor material are the main causes of interference, with steel rotor blades particularly problematic. However, information from the Canadian Wind Energy Association (CanWEA) website suggests that the problem is not significant for modern SWTs. CanWEA says that small rotor diameters and use of blade materials like carbon fibre, timber or fibreglass, negate any potential problem (CanWEA 2008).

2.4.5.5 Environmental

Small wind turbines do not produce pollutants, emits GHGs or necessitate the destruction of habitats to operate. They are considered a “clean” energy source. The one potential environmental concern that is frequently put forward is the hazard to bird and bat species. Any tall structure poses a hazard to birds or bats, and in particular, the moving blades have been known to cause deaths. A comprehensive search of relevant literature uncovered no studies into the magnitude of this problem, but the American Wind Energy Association (AWEA) website plays down the issue. According to the website, the issue is more prominent for large wind turbines, and that stray or roaming cats are responsible for far more deaths than SWTs (AWEA 2008).

2.4.5.6 Planning

Since they are still an emerging technology, local council regulations for the erection of a SWT are yet to be established. In general, consumers need to submit an application to their local council for assessment and approval of the proposed installation. The public is invited to raise concerns and these issues will be taken into consideration by the council. Before approving a SWT installation the council will usually ensure that the turbine is within height limits, is structurally and electrically safe, and will not negatively impact the local environment.

Regarding the engineering of the SWT, AS 61400.2-2006 (Standards Australia 2006) sets out the design requirements for SWTs in Australia. This document, based entirely on the equivalent IEC standard, deals with the safety philosophy, quality assurance, and engineering integrity of SWT designs. The safety requirements are specified for design, installation, maintenance and operation, in an effort to provide an appropriate level of protection against damage from hazards during the operating life of the SWT. Specifically these requirements encompass the electrical and mechanical systems, support structures and foundations, and the protection mechanisms.

2.5 Summary

The literature review introduced the increasing energy needs of modern societies, and recognised alternative energy sources presently available to meet demands. Renewable and non-renewable energy sources were defined and discussed, and the importance of renewable energy forms was presented in the context of the two major global issues that are gaining awareness and severity. Through recognition of the issues of global climate change and finite fossil fuel supplies, sustainable energy practices have been identified as critical. Governments have acknowledged this consensus opinion and introduced measures to enable preventative and corrective actions.

Wind energy was established as a viable source of renewable energy, capable of meeting a portion of Australia's energy requirements. The history of SWT development was briefly reviewed, and the current technology and market status were examined. The issues surrounding a SWT installation were identified, including noise and visual pollution, electromagnetic interference, safety, environment, and planning issues.

2.6 Conclusions

This review has highlighted significant gaps in the current literature. Since SWTs are a product in their infancy, engineering research and development is needed in most aspects of their design. The review has found an overabundance of literature relating to climate change and global warming. It is clear that despite opposing views to the consensus opinion, governments are pushing ahead with incentives to go green. This opens up niche markets, such as SWTs, and improves the likelihood of their successful integration into personal energy accountability.

Despite the lack of literature relating to SWT technology, there does appear to be progress in their technical development. Ultimately, the purpose of developing SWT technology is not for the potential engineering achievements, but for profitable business. Government incentives are already in place to foster a SWT market in Australia, and the issues of global warming and finite fossil fuel supplies are also driving the renewable energy market forward. To ensure that SWTs have a future in the Australian renewable energy market it has been identified through this literature review that the following actions could be taken:

- Studies into the social and environmental issues associated with SWTs would result in greater public acceptance of the technology, and an increase in the quality of products on the market.
- Local government guidelines for SWT planning could be examined further to provide definitive guidelines for customers in the domestic market.
- General advancement of all mechanical and electrical components, including simplification of designs to reduce the occurrence of faults, and increase the ability of domestic users to maintain and service the devices independently.

After reviewing the relevant literature, further investigation of the research objectives defined in Section 1.3 is deemed worthwhile. In Chapter 3 the methodology for developing a unique and uncomplicated SWT design will be pursued.

Chapter 3 Research Design and Methodology

3.1 Introduction

A SWT is a device that enables the extraction of the power in a moving mass of air, and converts this power to a usable form, namely, electricity (see Figure 3.1).

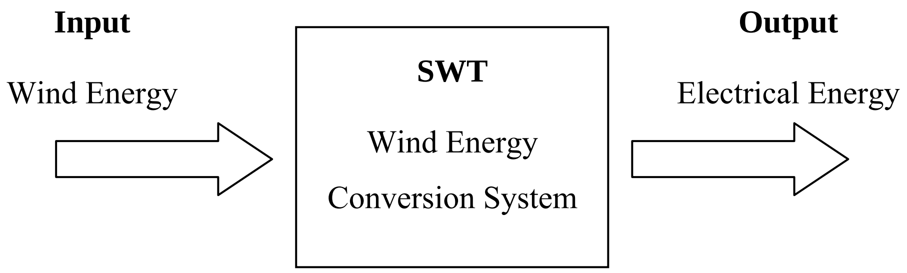

Figure 3.1 – SWT System Diagram (author’s original image 2008)

The objective of this chapter is to formulate a conceptual design for a SWT, and then by using typical engineering methods create a refined and viable final design. To achieve this objective a conceptual design will initially be devised, with a general operational description and a list of the required components.

The fundamental principles that govern the operation of a HAWT will be investigated to develop further understanding of the system requirements. These principles will assist in identifying the requirements of the design.

Once the design requirements have been ascertained, the major part of the SWT design can commence. This firstly requires an investigation of the wind as a resource, and selection of a target location for the designed device. The second step is the development of the turbine design itself. A breakdown of the components will identify those that are to be designed, and those that are to be obtained through commercial sources. Each of the major components in the wind energy conversion system will be designed or specified according to normal engineering methods.

This chapter will conclude with an overview of the final design and its expected outputs and specifications.

3.2 Conceptual Design

In Section 2.4.3 it was decided that the conceptual design would be based on a conventional horizontal axis, 3-bladed wind turbine. The major components of this type of design were identified as:

- Rotor – to convert the kinetic energy of the wind into rotational energy
- Generator – to convert the rotational energy into electrical energy
- Tower and foundation – provides stability for the turbine in high speed winds, and elevates the turbine to a height where wind speeds are high enough to generate the rated power.
- Yaw mechanism with tail – turns the SWT into the direction of the wind so that the rotor can operate most effectively.
- Furling mechanism – a mechanical means of power control, whereby the turbine turns away from winds that exceed a permissible limit.
- Slip rings and electrical cabling – transmits the generated electricity from the turbine at the top of the tower, down to the energy storage or conversion system at the base.
- Energy storage or conversion system – In many applications batteries are used to store the generated electricity, while often an inverter is used to convert the generated electricity to a form suitable for grid-connection.
- Electrical control system, with over-speed and lightning protection – electronic control of the rotor speed ensures that the turbine does not destroy itself in extreme wind conditions.

Other components are often included in SWT designs, such as gearboxes, nose cones, blade pitch control mechanisms and electronically controlled mechanical braking systems. In conceptualising the SWT design, considerable thought has been given to the simplicity that is required in the proposed regional location. When considering the high costs associated with the use of trained service technicians, regional locations would benefit from a simplified design. Reducing the number of components in the system decreases the likelihood of errors or failures, and also makes the device more easily serviced by the owner or local technicians.

Based on the above discussion, a diagram has been produced to highlight the key features of the proposed concept (see Figure 3.2). The basic method of operation and the major components of the conceptual design are as follows:

1. Kinetic energy in the wind is captured by the rotor, which causes the rotor to turn. The rotor will consist of a set of three blades, connected to a central hub.
2. The rotor hub, which is directly attached to the generator shaft, provides rotational motion to the generator. The generator converts the kinetic energy into electrical energy.
3. The output cables from the generator connect to the slip rings. This is necessary to allow the turbine to yaw into the wind direction, with the aid of the tail. The electrical cables travel down the inside of the tower to the base.
4. A mechanical means of furling is required to allow the turbine to turn out of the wind, thus regulating its power and preventing damage from high speed.
5. The tower will elevate the turbine and provide a housing for the electrical cables which emerge at the base.
6. The base of tower will be pivoted to allow for simple raising and lowering of the turbine, for installation and maintenance. The gin pole assists in this task by providing a lever arm that can be moved by a winch.
7. The foundations will support the base and the anchor point for the gin pole.
8. A controller will be provided to regulate the current through the batteries to prevent damage and maintain safe voltages.
9. The battery bank is used to store the captured energy so that the energy can be transported or used at a later time.

In addition to the above description of the conceptual design, the following things also have to be taken into consideration for the final design:

- Electrical safety and lightning protection
- Provision for manufacture, transport, installation, operation, maintenance and decommissioning
- Corrosion protection

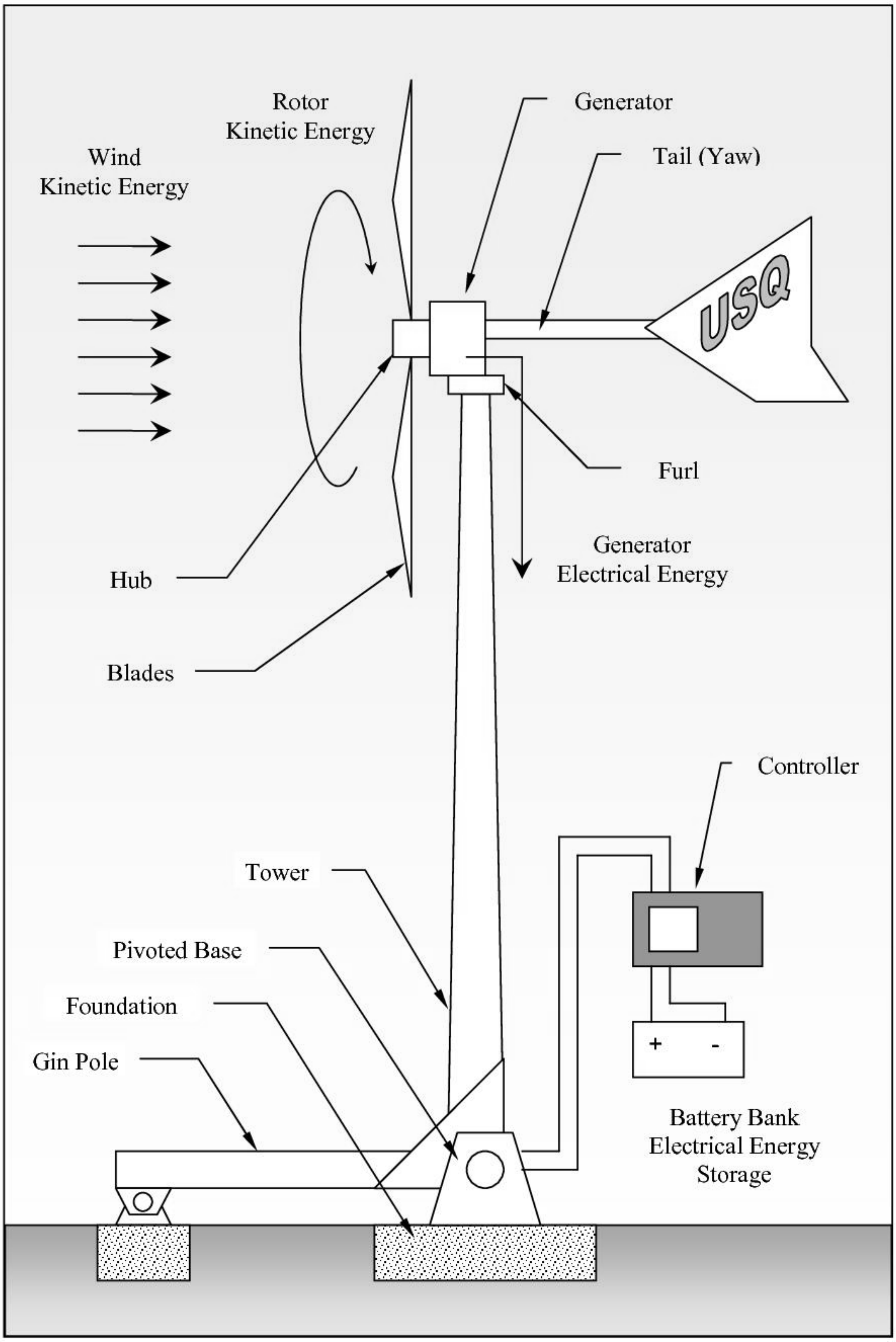

Figure 3.2 – Diagram of Conceptual Design (author's original image 2008)

3.3 Fundamental Principles

The basic function of the wind turbine rotor is to utilise the kinetic energy available in a moving air stream to cause the rotational motion of a shaft. Prior to any further component design, an understanding of the fundamentals of the steady-state principles of rotor operation is required. The rotation of a disk in a stream of moving air is governed by a set of basic rules. An idealised or perfect rotor, under steady-state conditions, is of course a simplification of the real system, but is nonetheless fundamental to an understanding of wind turbine power production. The basic concepts serve to illustrate the general behaviour of wind turbine rotors, and the airflow around them. They also enable the calculation of theoretical performance characteristics.

Beyond the basic mechanisms, practical rotor design requires an understanding of the aerodynamics of rotor blades. Blades normally take the form of airfoils, which are specially shaped to maximise aerodynamic lift forces while minimising drag. Modern HAWTs use either one, two or three rotor blades, where there are benefits and drawbacks of each type of design. Blade design is of critical importance in turbine starting and operating performance, not only in power extraction, but also in the structural integrity, and fatigue endurance of the rotor.

One of the basic theories of rotor aerodynamics is the one-dimensional (1D) Betz's Elementary Momentum Theory. More complicated theories, such as the two-dimensional (2D) Blade Element Theory, or Vortex Theory may provide more accurate determination of rotor performance, but for the purpose of this project are probably excessive (Hau 2006). Betz's simple momentum theory considers a stream of air moving through a circular disk. The analysis is based on the following assumptions:

- Homogeneous, incompressible, steady state fluid flow
- No frictional drag
- Infinite number of blades
- Uniform thrust over the entire rotor area
- Non-rotating wake (air stream after passing through rotor)
- Upstream and downstream static pressures are equal to the undisturbed ambient static pressure

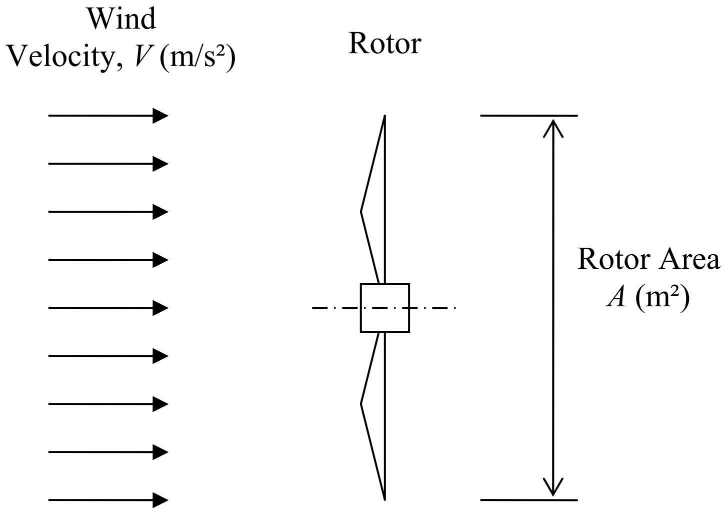

Figure 3.3 – Diagram of Conceptual Design (author's original image 2008)

One-dimensional theory considers a moving stream of air passing through a circular disk (Figure 3.3). The energy in the moving stream of air is given by the kinetic energy equation:

$$E_k = \frac{1}{2} m v_{wind}{}^2$$

Where

E_k = kinetic energy of the air stream (J)

m = mass of the air (kg)

v_{wind} = velocity of the air (m/s)

The power in this air stream is given by energy per unit time:

$$P = \frac{E_k}{t} = \frac{1}{2}\frac{m v_{wind}{}^2}{t} = \frac{1}{2}\frac{m}{t} v_{wind}{}^2 = \frac{1}{2}\dot{m} v_{wind}{}^2 \quad \text{(W)}$$

Where $\dot{m}$ is the mass flow rate of the air stream, and is given by,

$$\dot{m} = \rho A_{rotor} v_{wind} \qquad \text{(kg/s)}$$

Thus the power of a moving stream of air, with density ρ and velocity v, that flows through a disk of area A is:

$$P = \frac{1}{2}\rho A_{rotor} v_{wind}^{3} \qquad \text{(W)}$$

This expression gives the power available in a moving stream of air, but the power that can be extracted from this moving stream is what is required. Thus we can consider a ratio, known as the power coefficient, between the power in the wind, and the power of the rotor:

$$C_P = \frac{\text{Rotor Power}}{\text{Wind Power}}$$

In theory, the maximum possible rotor power coefficient is given by the Betz Limit, $C_P = 16/27 = 0.593$ (Manwell, McGowan & Rogers 2002). In practice, however, further inefficiencies cause a decrease in the maximum achievable output power:

- Rotation of the wake after the wind has passed through the rotor
- The number of blades used, and the losses at the blade tips
- Non-zero aerodynamic drag, as assumed by the 1D theory
- Electrical losses, such as heat loss through the transmission cabling or inefficiency of the slip rings

So the power output of the SWT can be summarised as:

$$P = C_P \eta \frac{1}{2}\rho A_{rotor} v_{wind}^{3} \qquad \text{(W)} \qquad (3.1)$$

Where

C_P = power coefficient of the blades

η = efficiency of the turbine, considering all mechanical and electrical losses

To be able to achieve the design output of 1 kW, it is necessary to determine the rotor power coefficient, estimate the overall turbine efficiency, evaluate the air density and wind speed at the target location, and specify a rotor diameter. Sections 3.4 and 3.5 will look at the target location, and the required wind parameters will be identified. Section 3.6 will consider the SWT turbine design in detail, and the specifications of the device will be determined.

3.4 Wind Resource and Siting

For the purpose of this project, a suitable SWT site will be one where the wind resource is sufficient to effectively produce 1 kW of power, and where the local community could benefit from the installation, such as an off-grid regional site. An understanding of the variation in wind availability and speed is necessary to evaluate the potential of a proposed site.

Wind is the movement of masses of air in the atmosphere, and is caused by several factors. The greatest contributor to global wind patterns is the sun, since heating and cooling in the atmosphere give rise to density and pressure variations that in turn create movement as warmer, less dense air rises, and is replaced with cooler, denser air. Solar energy varies with time in both daily and annual cycles, and with geographic factors. Non-uniform absorption and reflection of heat cause differences in the temperature, density and pressure of the atmosphere (Hau 2006).

Coriolis forces have a large effect on prevailing wind patterns across the globe. The basic process is that as solar energy heats air at the equator, causing it to rise and move towards the poles, the rotation of the Earth causes this air to deflect away from the poles back in the direction of the equator, thereby creating large circular systems (Manwell, McGowan & Rogers 2002).

Closer to the Earth's surface, in the "boundary layer", the strength of geostrophic winds, the surface roughness, the Coriolis effects and thermal effects are the greatest contributors to local wind regimes. At any particular location we can take advantage of these effects. Due to their low hub heights, SWT power extraction is influenced greatly by topographical factors. Surface friction reduces the wind speed requiring towers to be built at a height that maximises extracted power while minimising initial unit cost. An example of the topographical influence is in coastal areas, where wind speed is generally higher than inland areas because of the pressure difference between air over land and sea.

Because they are short and small, the performance of SWTs will be greatly influenced by local topography, in particular trees and buildings. Ideally the turbine would be sited on a flat, elevated and obstacle-free terrain. For a SWT however, it is equally important to generate electricity close the point of use, to decrease losses from transmission cables.

Within the boundary layer, wind speed increases with height according to the following equation (Hau 2006):

$$v_H = v_{wind}\left(\frac{H}{H_{hub}}\right)^{\alpha} \tag{3.2}$$

Where,

v_H = wind velocity at height, H (m/s)

H = height above ground level (m)

H_{hub} = height of turbine hub above ground level (m)

α = Hellman's exponent

Hau (2006) states that Hellman's exponent can be approximated by the following formula:

$$\alpha = \frac{1}{\ln \frac{H}{z_0}}$$

The value z_0 is the roughness length of the terrain in metres. The roughness length is a parameter determined by the type of surface irregularities, such as trees or building. Where there are no obstructions, such as across flat plains or over water, the roughness length may be as small as a millimetre. But in dense urban or forest areas the roughness length can be up to a metre. See Appendix B.2 for a list of roughness lengths (Hau 2006). According to the given equations, as the height above ground level, H, increases and the roughness length, z_0, decreases, the wind velocity, v_H increases.

Besides creating obstructions in the terrain that serve to create turbulence in the air flow, topographical features such as hills and valleys may also have positive impacts on local wind speeds. While large mountains can block or divert winds, small hills can actually increase the speed of winds. Figure 3.4 (Coppin, Ayotte & Steggel 2003) shows how wind speed can increase over a small hill, which begins to approximate an aerodynamic object. This phenomenon can easily be used to an advantage, and plays an important role in micro-scale siting. The diagram shows that wind approaching a hill decelerates near the base of the hill, but accelerates as it approaches the apex. The zone of maximum wind speed occurs at the leading crest, and beyond this the air flow becomes turbulent.

The data available to assist in siting the SWT is limited to the freely accessible information from the Australian Bureau of Meteorology (BOM). The BOM monitors approximately 180 Automatic Weather Stations across Queensland. The relevant data that can be obtained from these stations are the mean monthly and annual 9am and 3pm wind speeds, and the maximum gusts. The recordings are taken at 10m, and individual sites may be susceptible to interference from surface obstacles.

Low-resolution wind maps are often sufficient for determining wind conditions at a proposed site. Obtaining more accurate data is time consuming and expensive, though highly recommended where the SWT will be heavily relied upon for the electricity it generates. A proposed site is normally monitored for at least twelve months prior to installation. Observed data other than measured wind speeds can not be underestimated. For example, trees that are seen to be growing at an angle can actually be a reliable indicator of available wind resources. This phenomenon is known as tree flagging, and an example is shown in Figure 3.5. The Griggs-Putnam Index of Deformity (Coppin, Ayotte & Steggel 2003) has been developed as a tool for approximating local wind speed by observing tree deformity or flagging (see Figure 3.6). Knowledge of the characteristics of wind, such as turbulence and variability, are of great assistance in turbine siting. Practical experience and observation of local conditions often play a critical role in SWT siting, since wind models are difficult and expensive to create, and probably aren’t worth the effort on such small-scale projects.

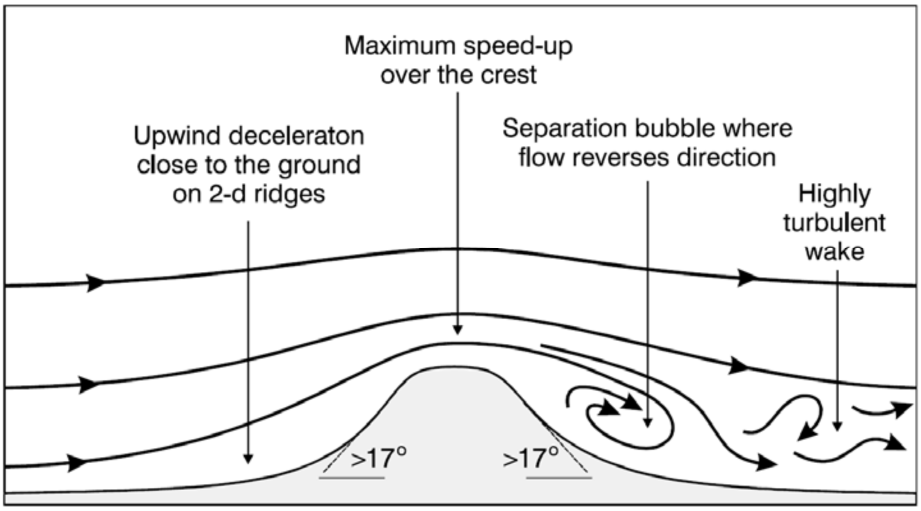

Figure 3.4 – Wind flow over a steel hill (Coppin, Ayotte & Steggel 2003)

Figure 3.5 – Tree flagging as a visual indicator of local wind speed (Coppin, Ayotte & Steggel 2003)

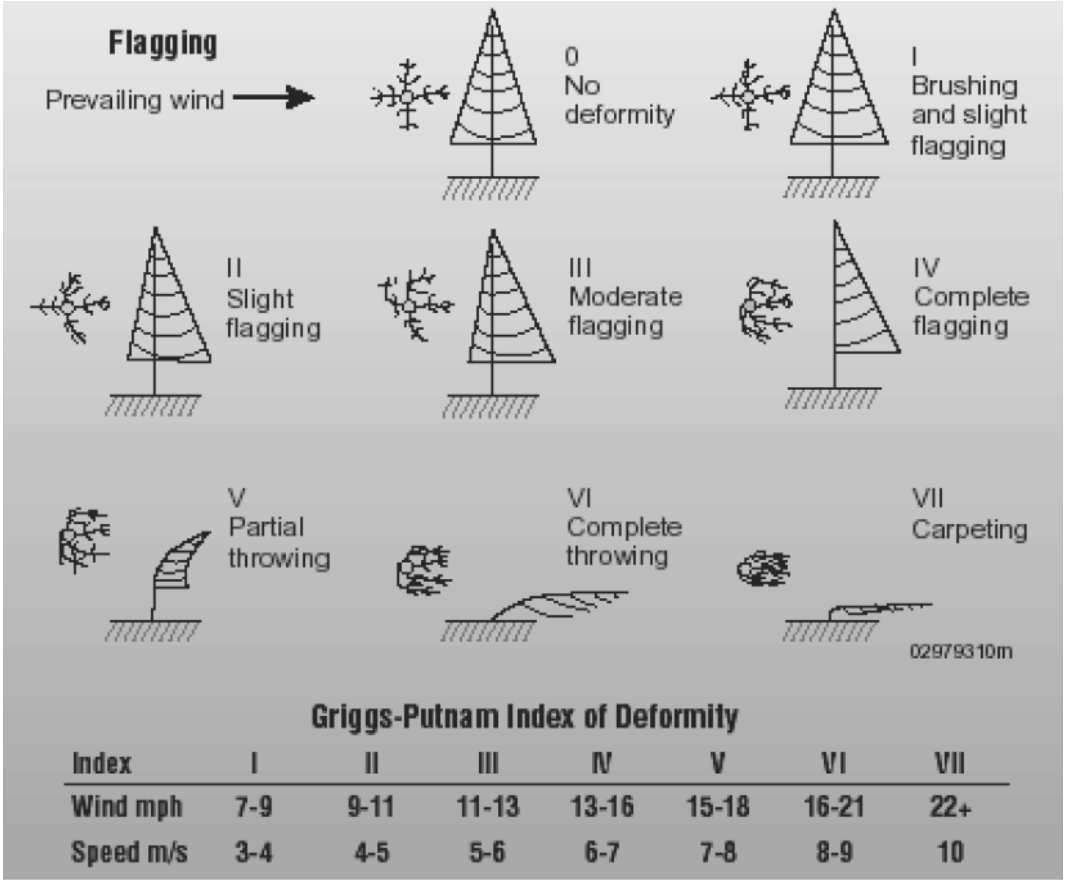

Index	I	II	III	IV	V	VI	VII
Wind mph	7-9	9-11	11-13	13-16	15-18	16-21	22+
Speed m/s	3-4	4-5	5-6	6-7	7-8	8-9	10

Figure 3.6 – Griggs-Putnam Index of Deformity (Coppin, Ayotte & Steggel 2003)

3.5 Target Location

To identify a target location for the SWT installation, a comparison of several sites is to be undertaken. The characteristics of each location upon which comparisons will be made are the wind regime, the potential to replace non-renewable energy supplies, and the potential to benefit the community along with its willingness to adopt the technology.

Several areas have been identified from the map of Queensland's electricity distribution network (see Figure 2.11), and national park RAPS locations (see Figure 2.12). The BOM has been used to look up potential sites to assess their available wind. The results of this investigation are shown in Figure 3.7.

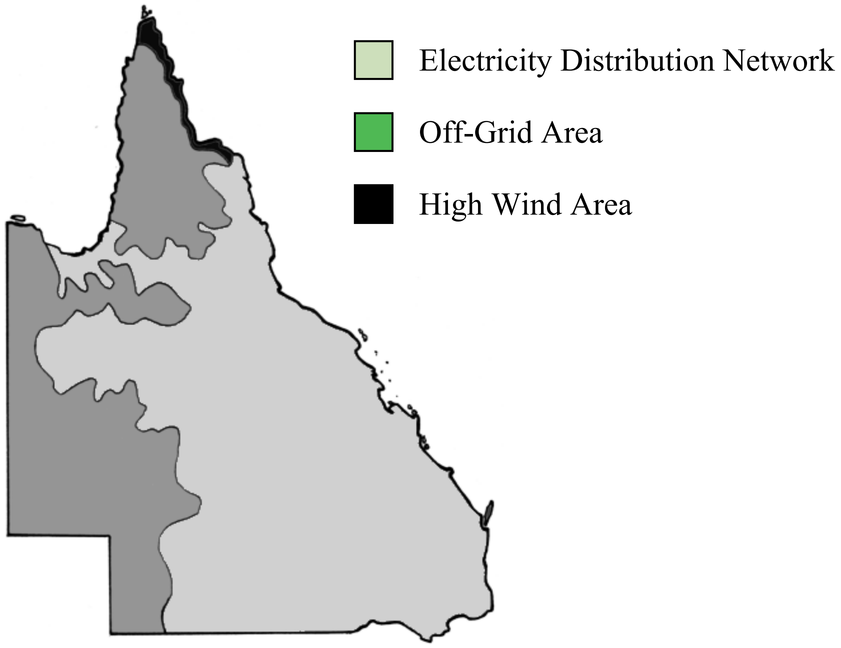

Figure 3.7 – Map of potential installation sites (author's original image 2008)

Without being able to visit a site and look at local topography it is difficult to assess the potential of available wind power, but it is assumed that there would be at least one adequate location at each of the proposed communities. This means that there is likely to be a small, steep hill with few obstructions, and that is open to the major winds in the area.

The three alternatives considered are:

- Fraser Island
- Torres Strait Islands
- Lockhart River

Fraser Island is situated off Queensland's eastern coastline, near the city of Hervey Bay. The entire island comprises the Great Sandy National Park, which was World Heritage Listed in 1992. Only a few hundred people inhabit the island (ABS 2006), with most working in the tourism and hospitality industry at the island's resorts. Rangers also do extensive work in the Great Sandy National Park, and the Ranger's Stations require power and hot water to make them liveable. The Ranger's Stations and resorts are currently powered by diesel and gas generator units.

Recent government initiatives have placed an emphasis on the uptake of renewable energy technologies, and the Queensland Parks and Wildlife Service (QPWS) has proposed that consistent power should be available at permanently occupied ranger stations. This proposal has already seen several renewable energy RAPS commissioned with funding under the RRPGP scheme. The benefits of this initiative are a reduction in exhaust emissions from conventional generators, reduced fuel transport and storage costs, reduced environmental risks and enhanced staff and public amenity. Fraser Island's resorts also stand to benefit from the use of renewable energy power supplies. While there may be opposition to a SWT installation, specifically with regard to those issues addressed in Section 2.4.5, the advantages of providing a clean energy source in a World Heritage listed area are evident. Waddy Lodge serves as one example of the willingness of the Fraser Island community to implement renewable energy solutions (BCSE 2008). While the installation is a photo-voltaic (PV) system, the project, which has been overwhelmingly successful, draws attention to the motivation to adopt new technologies.

The wind resource on Fraser Island is comparable to the best resources in Queensland. With average annual 9am and 3pm wind speeds of 5.94 and 6.25 m/s respectively, Fraser Island is well positioned to take advantage of the available wind energy (see Figure B.3.1). The plot of average wind speed highlights the consistency of the available resource, and the wind roses show that the prevailing easterly wind direction is the dominant direction. Although being heavily vegetated, the largest sand island in the world has the advantage of low roughness lengths, where the turbine can be sited in an open area. Rotor speed control will need to be carefully considered at this location because of the seasonal storms that frequent the area.

Approximately 8500 people inhabit the Torres Strait Islands at the northern tip of Queensland, between Cape York Peninsula and Papua New Guinea (ABS 2006). With several hundred islands, home to many small and isolated indigenous communities, Torres Strait represents an entirely different target market. Thursday Island, for example, has approximately 4000 residents, whose power currently comes from diesel generators and two large wind turbines that supply about 10 percent of the total energy requirements (Ergon Energy 2008b). A recent article reported that Ergon Energy is considering upgrading or replacing the existing wind turbines, while also investigating sites on other islands where wind energy could be captured (Torres News 2008). The Torres Strait Regional Authority (TSRA) recognises the need to implement a variety of renewable energy systems, including wind turbines, and has called for a feasibility study to be undertaken to investigate and recommend the most suitable renewable energy systems for servicing the Torres Strait region (TSRA 2008). Decentralisation of power stations is seen as distinctly advantageous here where communities are dispersed, and conventional transmission lines have clear physical barriers.

The available wind is some of the best in Queensland, with average annual 9am and 3pm wind speeds at 6.02 and 7.31 m/s, respectively. The plot of the wind speeds shows consistently high averages, with a peak observed between the months of July and September where average wind speeds can exceed 10 m/s (see Figure B.3.5 and Figure B.3.6). The prevailing wind direction is easterly, and the wind roses show wind conditions to be mostly between 5 and 11 m/s. The Torres Strait Islands occupy an area that is frequently exposed to seasonal tropical storms, and practical SWT design will consider the power control required.

Lockhart River is a community of about 500 Aboriginal and Torres Strait Islander people located on the eastern coast of Cape York Peninsula (ABS 2006) on Australia’s mainland. This small community is currently serviced by an Ergon Energy isolated generator using diesel fuel. At present there appear to be no specific regional initiatives for the advancement of renewable energy power supplies, although the current diesel generator is intended to be replaced in the future.

The region has average wind speeds of 3.39 and 4.94 m/s at 9am and 3pm, respectively, with monthly averages peaking in spring (see Figure B.3.7). As with the other tropical sites, the monsoon season brings storms and higher wind speeds, with the easterly direction prevalent.

The results of investigation into the potential target areas have been summarised in Table 3.1. It is immediately apparent that, according to the available BOM data, the Torres Strait Islands have the highest average wind speeds.

	Mean Annual Wind Speeds (m/s) 9am / 3pm	Potential to replace existing non-renewable power supply	Benefit to community and willingness to adopt technology
Fraser Island	5.94 / 6.25	High	High
Torres Strait Islands	6.02 / 7.31	High	High
Lockhart River	3.39 / 4.94	Medium	Medium

Table 3.1 – Target location comparison matrix (author's original)

The qualitative rankings given for the site's potential to replace existing non-renewable power supplies are based on the size of the community and any existing actions. While Fraser Island has a small number of inhabitants, the QPWS initiative to replace existing diesel generators means that there is a high potential to replace non-renewable power supplies. The Torres Strait Islands have a larger population, often decentralised and isolated, and thus there is a high possibility that a SWT installation could replace a similar diesel unit. A ranking of medium was awarded to the Lockhart River since it has a small community, and has currently no known actions to replace existing power supplies.

The benefit to the community and willingness to adopt wind turbine technology was considered, and Fraser Island and the Torres Strait Islands rank highly because of the current initiatives undertaken by local governments and community members.

Based on the high average wind speeds, and the high potential to usefully integrate SWT technology into the local energy supply, the Torres Strait Islands have been selected as the target location for the proposed SWT installation.

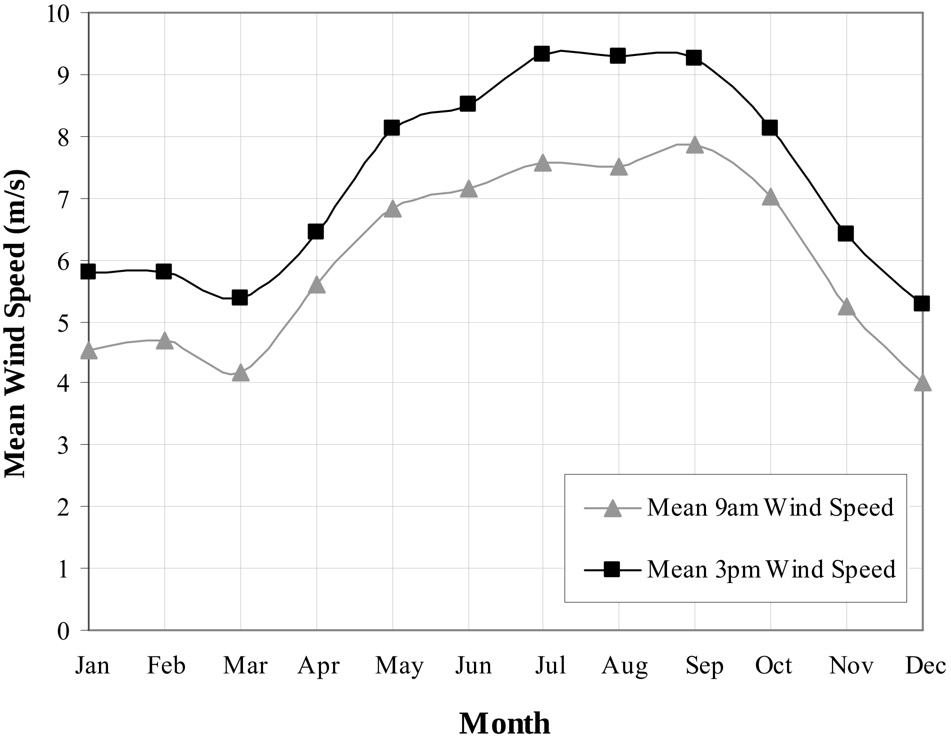

Figure 3.8 – Torres Strait Mean Wind Speed (BOM 2008)

The wind speeds obtained through the BOM represent averages over the entire year. Figure 3.8 has been produced from data provided by the BOM, with a modification from average wind speeds in km/h to m/s. From Figure 3.8 it can be seen that the monthly average wind speeds reach a peak of about 9.3 m/s from July to September. Within each month, along with diurnal variations, the wind speed will fluctuate considerable. It is assumed then, that the average annual wind speed, while useful in determining the optimum target location, is not appropriate as a design wind speed. For this reason the design wind speed used for further power calculations will be taken as 10 m/s. The selection of this design wind speed will also facilitate comparison of the final design with competing devices. Air density will be taken as 1.2 kg/m³.

The complete set of data obtained from the BOM for each of the sites investigated can be found in Appendix B.3.

3.6 Design

This section will consider the SWT turbine design in detail, and the specifications of the device will be determined. Each of the required components will be systematically investigated and an optimum solution formulated. This stage of the methodology follows the selection of a target location, and will complete the overall system design.

Selection of the generator and rotor blades precede other elements of the SWT, so the following order of design will be followed:

1. Generator
2. Rotor Blades
3. Hub
4. Turbine body and tail, with yaw and furl mechanisms
5. Tower
6. Electrical and Control Systems

The final result of the design will be a set of components integrated into a workable system. From the individual design details, a set of performance specifications will be determined so that the physical characteristics of the turbine can be directly compared with competing designs. Tables B.1.1, B.1.2 and B.1.3 in Appendix B.1 have been prepared to facilitate comparison of several competing SWT designs currently available. The predicted performance specifications of the SWT designed here will be compared directly with those in Appendix B.1.

3.6.1 Generator

3.6.1.1 Functional Description

The generator is a fundamental SWT element. The rotational motion produced by the rotor is converted by the generator into an electrical current. Generator is a broad term that describes an electrical machine that converts mechanical to electrical power, but there are several different types available.

Generators can be classified according to:

a) The generated current - Direct Current (DC)
- Alternating Current (AC)

b) The field - Permanent magnet
- Separately excited
- Self-excited
- Synchronous
- Induction

There are a wide variety of generator types that are viable options for this SWT project, but conveniently, recent growth of the SWT market has led to the production of generators specifically designed to suit SWT applications. These special purpose generators are predominantly permanent magnet generators (PMG).

3.6.1.2 Operational specification or requirements

To produce electrical power the generator needs an input torque. Compared to other rotating electrical machines, such as induction motors the special purpose PMGs require low angular velocities. The required generator output is 1 kW, so a PMG that can achieve this output at a low RPM will be ideal.

PMGs are normally configured for 3-phase, AC output, so a rectifier will need to be added to the system after the generator to convert the current to DC for battery charging. The output voltage will need to be in the vicinity of 12, 24 or 48 volts to match conventional battery voltages.

3.6.1.3 Reliability and Maintainability

The standard required for this system is low maintenance and high reliability, since the turbine will be located where trained service technicians may not be readily available. The need to lower the tower to be able to service the turbine is also a good reason to avoid regular servicing. As such, components which require infrequent maintenance are highly desirable.

Protection from corrosion and degradation are also necessary, since the generator will be continuously exposed to the sun, and to salt air. A painted finish is desirable where the material is susceptible to corrosion, such as mild steel or polymers.

3.6.1.4 Selection and Cost

An investigation into commercially available PMGs resulted in three potential generators. Table 3.2 provides a comparison of the specifications of each PMG. Information was acquired from Ningbo Ginlong Technologies Co. Ltd. (Ginlong 2006), WindBlue Power (WindBlue 2008) and FuturEnergy Ltd. (FutureEnergy 2008).

Manufacturer	**Ginlong**	**WindBlue**	**FuturEnergy**
Model	GL-PMG-1000	DC-540	PMG V3
Origin	China	USA	UK
Specifications			
Rated Ouput Power (W)	1000	Not specified	1000
Rated speed (rpm)	~ 440	Not specified	Not specified
Voltage at rated speed	~ 270 VAC	Unregulated DC	AC
No. of phases	3	3	3
Magnet Material	Neodymium Iron Boron	Neodymium	Neodymium
Casing Corrosion Protection	Painted	Baked-on ceramic	-
Weight (kg)	15.7	-	7
Rectifier	No	Built-in	Supplied
Cost			
Total Cost - 1 Set Basis (AUD)	$570.00	$239.00	$577.64
Total Cost - 100 Set Basis (AUD)	$465.00	$239.00	$577.64

Table 3.2 – Comparison of commercially available generators (data acquired by author from suppliers 2008)

SWTs are an emerging technology, and the PMGs designed for SWT applications are produced by companies with little repute. The information available from Wind Blue and FuturEnergy was not as convincing as Ginlong, who design and manufacture their generators in-house. So it is recommended then, that despite the slightly higher cost, the Ginlong GL-PMG-1000 be used for this SWT project. The Ginlong PMG has a 3-phase AC output, and is capable of generating the required 1 kW at approximately 440 rpm. The casing of the generator is aluminium, and it is also painted to resist oxidation and corrosion. Figure 3.9 shows front and rear views of the PMG unit, and Figures 3.10 and 3.11 show the output power and voltage against a range of rotational speeds.

Figure 3.9 – Views of Ginlong GL-PMG-1000 (Ginlong 2006)

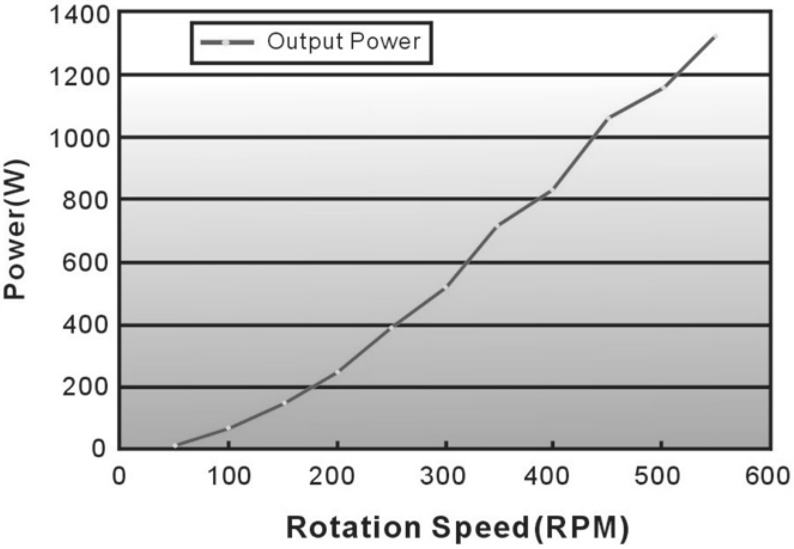

Figure 3.10 – Power curve of GL-PMG-1000 (Ginlong 2006)

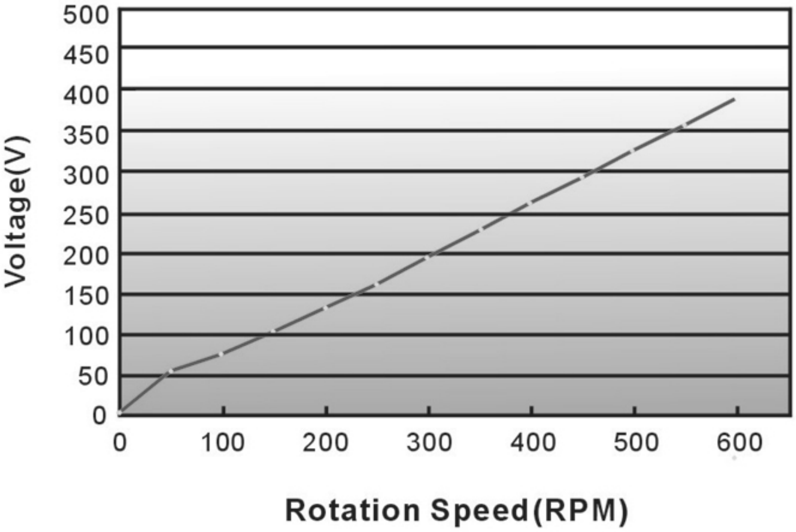

Figure 3.11 – Open Circuit Voltage of GL-PMG-1000 (Ginlong 2006)

3.6.2 Rotor Blades

3.6.2.1 Functional Description

Operating as a set, rotor blades are a fundamental element of the turbine. Their sole function is to convert the force in the wind into torque. The two major considerations involved in blade design are aerodynamics and structural integrity. Typical loads experience by blades can be steady and varying, since the wind fluctuates constantly. Thus, fatigue is a critical item to address in blade design. Minimisation of blade weight is important, so fibre-composites are often the material of choice. This in turn increases costs, including manufacturing costs.

3.6.2.2 Design Considerations

As mentioned in Section 2.4.3, extensive research has led to the development of these critical components. The University of Newcastle in particular has a large amount of experience in blade design, including materials, fatigue, structural and dynamic performance, and FEA. It is apparent from literature searches that this area of wind turbine design is currently getting a lot of research attention. To competently and effectively create a unique blade design for this SWT project would require extended research time, and lacking this, it has been decided that it would be more appropriate to source a set of blades from an external supplier. The key design features still need to be considered so that the optimum blade set can be procured.

The constituent of the power equation associated with the rotor blades is the swept area, or rotor diameter. Thus the length of each individual blade is a critical design factor. In addition, the tip speed ratio of the rotor becomes important, where tip speed ratio is given by:

$$\lambda = \frac{\text{tangential blade tip speed}}{\text{design wind speed}} = \frac{v_{tip}}{v_{wind}}$$

A high tip speed ratio means a high rate of rotation of the rotor, and this leads to greater power generation capability, particularly in low speed winds. However, the high rate of rotation leads to greater amounts of aerodynamic noise, and higher stresses in the blades and in the rest of the turbine.

The inertial forces induced by the blades as they rotate can be reduced by decreasing the blade mass, and designing the blade to locate the centre of gravity (COG) near the axis of rotation. Since blades are more highly stressed near the axis, it is very useful to increase the thickness of the blade section towards the axis, and taper this off to a much thinner and smaller section at the tip.

3.6.2.3 Material and Manufacture

An appropriate selection of material is critical in blade design, but this can not occur independently of the consideration of the manufacturing method. Hau (2006), on the basis of previous experience and knowledge of aircraft engineering, lists several materials as being suitable for wind turbine rotor blades. These materials can be assessed for the SWT design according to their strength and fatigue characteristics, and relative cost. The cost involves not only the material itself, but the cost of manufacture. Ashby and Jones (2005) provide approximate prices per tonne of a range of engineering materials, relative to the price of mild steel. Table 3.3 has been developed to compare the properties of the materials considered by Hau (2006) with the relative prices provided by Ashby and Jones (2005). The cost data is based on approximate prices relative to mild steel ($100/tonne) in 2005 so the actual figures are out of date, but the comparison of price differences remains valid.

Parameter Material	Specific Weight kg/m³	Modulus of Elasticity kN/mm²	Fatigue strength 10^7 N/mm²	Relative Material Cost $/tonne	Relative Volume Cost $/m³
Aluminium	2700	70	20	400	1080
CFRP	1400	44	100	20000	28000
GFRP	1700	15	35	1000	1700
Wood	380	8	20	200	76

Table 3.3 – Blade material properties and costs (Hau 2006, Ashby & Jones 2005)

The manufacturing method most likely to be employed for aluminium blades would be machining or casting, and in high production runs this is relatively economical. Due to the complex shape of the blades, a 6- or 7-axis computer numerical control

(CNC) milling machine is likely to be required, but once the machine code has been programmed the cost per unit would be relatively low. The carbon and glass fibre composites require a mould to be produced, and this is likely to be machined from a similar CNC milling machine. Thus the initial cost is high. Since fibre-composite components are normally produced by hand, labour costs would be much higher than for the aluminium blade. Wood can be machined like aluminium, but may also be hand-carved. This leads to errors in airfoil shapes, and inconsistencies that can introduce vibrations into the drive train.

3.6.2.4 Reliability and Maintainability

Wind turbine blades need to operate without regular maintenance, however it is anticipated that annual inspection and cleaning would be undertaken to maintain good working order. Exposure to the elements leads to degradation and corrosion if preventative measures have not been provided. Untreated and unpainted timber is likely to degrade quickly if the timber becomes wet. Fibre-composites can degrade when exposed to ultraviolet (UV) radiation, although a gel coat is often included as an outer layer to minimise this problem.

3.6.2.5 Selection and Cost

The design process for the rotor blades has considered the anticipated loads and consequently, the high structural and fatigue strengths required. It has also been recognised that minimal blade weight has the advantage of lowering the start-up speed of the turbine, while reducing inertial forces. Different materials were considered and the maintenance and reliability issues addressed.

There is now ample data available to begin refining the conceptual design. Power coefficient, tip speed ratio and diameter are all functions of the geometry and aerodynamic performance of the blade. To estimate the blade diameter required we can guess a power coefficient and use this in the power equation. Knowing the Betz limit of 0.593 and realistically hoping for a power coefficient greater than 0.2, a first guess at the power coefficient will be taken at half way, that is $C_P = 0.4$. The overall efficiency will be taken as 90 percent, and the air density and design wind speed were given in Section 3.5 as 1.2 kg/m^3 and 10 m/s respectively. As described in Section 3.3 the power output of the SWT is given by Equation 3.1.

Equation 3.1 can be rearranging for rotor area:

$$A_{rotor} = \frac{P}{\frac{1}{2} C_P \eta \rho v_{wind}^{3}} \qquad (\text{m}^2)$$

Now substituting in the known values:

$$A_{rotor} = \frac{1000}{\frac{1}{2} \times 0.4 \times 0.9 \times 1.2 \times 10^3} = 4.63 \qquad (\text{m}^2)$$

This is the approximate rotor area required to produce 1 kW of power. So the radius of the rotor, or the blade length is given by:

$$r = \sqrt{\frac{A_{rotor}}{\pi}} = \sqrt{\frac{4.63}{\pi}} = 1.2 \qquad (\text{m})$$

A search for SWT blades that met these approximate specifications was subsequently conducted. Table 3.4 summarises the data acquired. Information was provided by Applied Magnets (Applied Magnets 2008), CMS Magnetics Co. (CMS Magnetics 2008), Qingdao Zhongchen FRP Engineering Co. Ltd. (Zhongchen 2008) and Jiaxing Anhua Wind Power Generator Co. Ltd. (Anhua Wind 2008). No manufacturers of aluminium or timber blades were found that met the power requirements of the design. Four blade manufacturers, all supplying GFRP blades, were evaluated.

The information from the blade suppliers can now be used to re-evaluate the design in terms of power. With the lowest weight and cost, and highest power coefficient, the Applied Magnets Windmax 8.5FT blades appear to be the best option. The specifications need to be checked to determine the power that can be extracted. The real values can now be substituted into Equation 3.1:

$$P = 0.49 \times 0.9 \times \frac{1}{2} \times 1.2 \times 5.31 \times 10^3 = 1405 \qquad (\text{W})$$

This represents the power attainable at the design wind speed of 10 m/s, and is greater than the required 1 kW. The electrical power that can be extracted from this is determined by the rotational speed of the generator. It is already known that an angular velocity of approximately 440 rpm, or about 46.1 rad/s is required by the generator to produce 1 kW of electrical power. So given the tip speed ratio of 8, we need to know if the rotor will turn at the required speed.

$$v_{tip} = v_{wind}\lambda \qquad \text{(m/s)}$$

$$\omega = \frac{v_{tip}}{r} = \frac{v_{wind}\lambda}{r} \qquad \text{(rad/s)}$$

$$\omega = \frac{60}{2\pi}.\frac{v_{wind}\lambda}{r} = \frac{60}{2\pi}.\frac{10\times 8}{1.3} = 588 \qquad \text{(rpm)}$$

The blades are able to provide the angular velocity required to match the generator requirements, and are deemed adequate for their intended purpose. Figure 3.12 shows an image of the selected blades.

Manufacturer	**Applied Magnets**	**CMS Magnetics**	**Qingdao Zongchen FRP Engineering**	**Jiaxing Anhua Wind Power Generator**
Model	Windmax 8.5FT	PowerMax+085	-	-
Origin	USA	China	China	China
Specifications				
Rotor Diameter (m)	2.60	2.60	2.50	2.50
Rotor Swept Area (m²)	5.31	5.31	4.91	4.91
Material	GFRP	GFRP	GFRP	GFRP
Rotor Power Coefficient	0.49	0.49	0.2	0.4
Tip Speed Ratio	8	8	6.54	6.87
Blade Mass (kg)	1.82	1.95	4.00	2.30
Balanced	YES	YES	YES	YES
Cost				
Total Cost - 1 Set Basis (AUD)	$423.32	$408.88	$2,628.08	$478.34
Total Cost - 100 Set Basis (AUD)	$398.24	$408.88	$405.73	$464.71

Table 3.4 – Comparison of commercially available blades (data acquired by author from suppliers 2008)

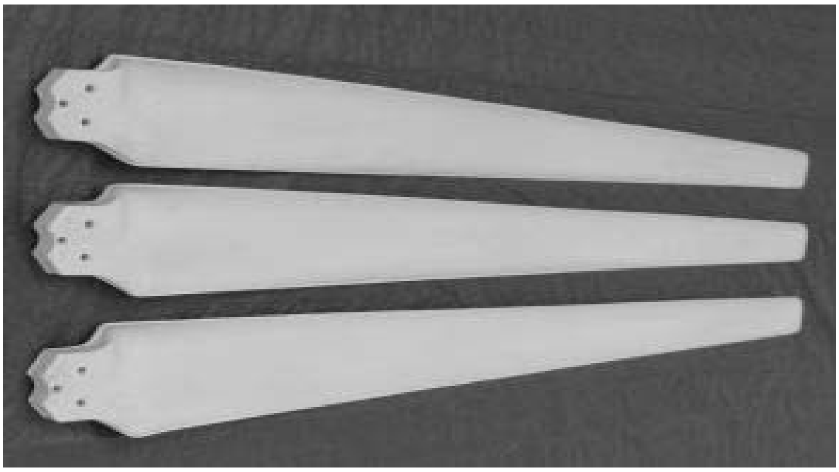

Figure 3.12 – Selected rotor blade (Applied Magnetics 2008)

3.6.3 Hub

3.6.3.1 Functional Description

The hub provides a connection point for the set of blades, so that the rotor can be formed. It attaches to the shaft of the generator so that the rotation of the blades can be transmitted to the generator.

3.6.3.2 Design Considerations

The major loads experienced by the hub during normal operation are the inertial forces from the blades as the rotor spins. The hub will be analysed as if in static equilibrium, so that the effect of the blade rotation can be determined.

The hub needs to be dimensionally precise to ensure a good fit with the generator shaft and the rotor blades. The radial spacing of the holes for the rotor blades needs to be accurate to maintain the dynamic balance of the rotor. If the rotor becomes unbalanced, cyclic forces will be introduced that may overload the hub and generator shaft. For this reason, the entire rotor, that is, the hub and blades, should be dynamically balanced prior to installation. Any modifications that need to be made to the hub to ensure dynamic balance can then be made prior to commissioning.

3.6.3.3 Material and Manufacture

Steel and aluminium have been considered due to their machinability, strength and availability. To ensure that the hub is dimensionally precise, the optimum manufacturing method is machining. While the density of steel is greater than that of aluminium, allowing weight reduction for the turbine, steel has greater strength and lower cost.

3.6.3.4 Reliability and Maintainability

The requirements for maintenance of the hub are expected to be minimal. It is recommended that after installation of the SWT, the blade attachment bolts be tightened, and the generator shaft connection inspected. After the rotor has been worn in, these checks need only occur annually.

The hub requires a surface finish to provide protection from corrosion and oxidation, and since the material will be metal, the finish is likely to be paint.

3.6.3.5 Final Design

The final design incorporates all of the elements from the previous discussions of design considerations, material, manufacture, reliability and maintenance. A three-dimensional SolidWorks model was developed that provided attachment to the tapered generator shaft, fixed with a standard key. The holes for attaching the rotor blades were included as per the manufacturer's specification.

The selection of a suitable material requires FEA of the hub model. The inertial forces caused by the angular velocity of the rotor are given by:

$$F_{inertia} = r_G \omega^2 m_{blade} \qquad \text{(N)}$$

Where

r_G = Distance from axis to centre of gravity (m)

ω = Angular velocity of rotor (rad/s)

m_{blade} = Mass of individual rotor blade (kg)

The blade manufacturer specifies a blade mass of 1.82 kg, with the COG located at a distance of 620 mm from the rotor axis. The angular velocity of the rotor is a function of the wind speed, but is limited by the furling system that will be described in Section 3.6.4. To find the maximum inertial force of each blade the maximum rotor speed is required, and later calculations show this to be 90 rad/s. Thus, the inertial force of each blade is:

$$F_{inertia} = 0.62 \times 90^2 \times 1.82 \approx 9140 \text{ N}$$

This force is shared evenly by each of the three blade bolt holes, and is equal for each blade. The application of these forces on the static hub is described by Figure 3.13. The reaction forces at the hub are designated by R_x and R_y.

This loading situation was analysed using Cosmos static solver and the maximum stress for this load case was found at the centre of the bolt holes, at a magnitude of 33.2 MPa, as shown in Figure 3.14.

Juvinall and Marshek (2000) identify basic grades of steel and aluminium as having yield strengths of 290 MPa and 60 MPa respectively. The stress induced by the inertial loads is less than the yield strengths of both materials. The factor of safety

(FOS) for each material is 8.7 for the steel and 1.8 for the aluminium. In the event of an extreme loading condition beyond that considered in this analysis, the FOS of the aluminium hub is likely to be too low. A safety factor of 3 is a basic nominal standard for most engineering design, and will be accepted here since only one loading condition has been considered. Thus, the hub will be manufactured from mild steel. The detail drawing for the hub can be found in Appendix B.5.

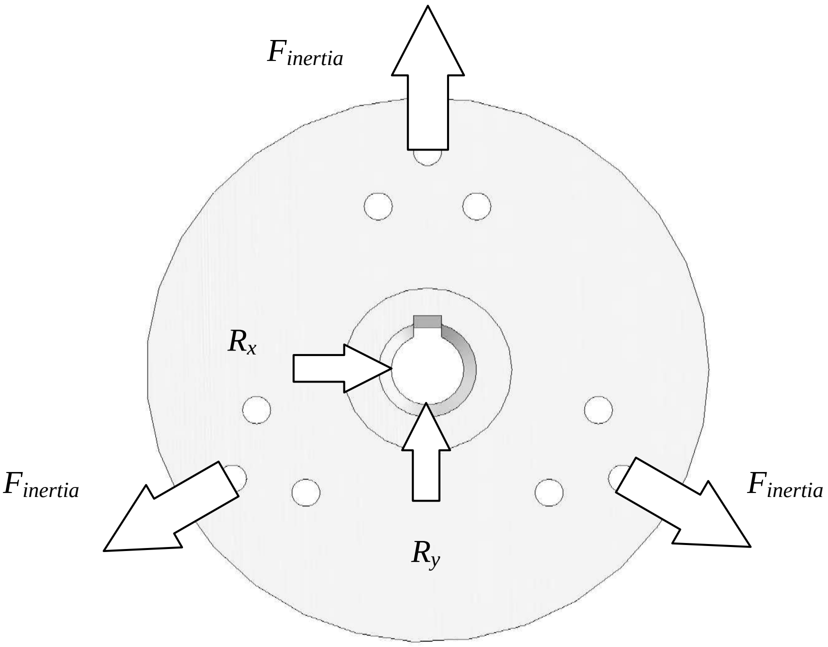

Figure 3.13 – Hub Loads (author's original image 2008)

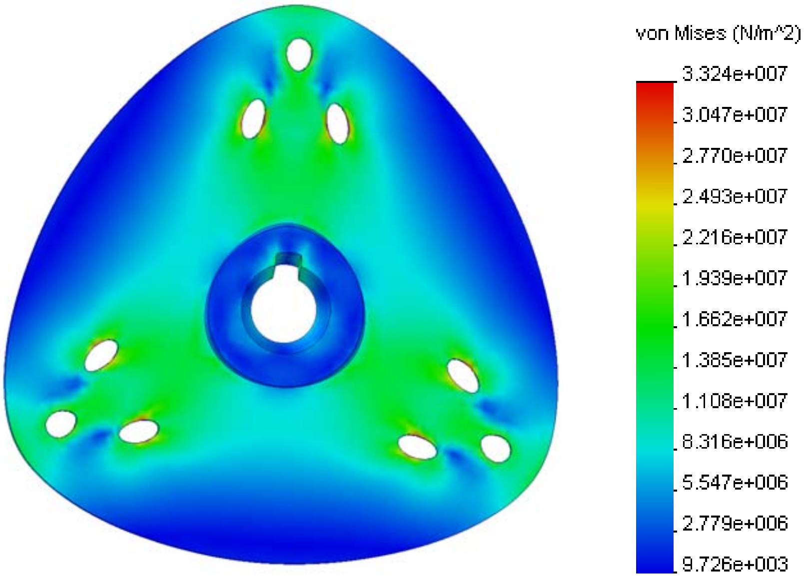

Figure 3.14 – Image of designed hub (author's original image 2008)

3.6.4 Turbine Body and Tail with Yaw and Furl Mechanisms

3.6.4.1 Functional Description

The turbine body is central to the SWT design. The body provides a mounting point for the generator, and attaches to the top of the tower. Integral with this design are the yaw and furl mechanisms. Yawing is the process of turning the rotor to face into the wind, that is, to align the rotor axis with the wind direction. Since wind is a constantly fluctuating energy source, both in intensity and direction, yawing is a process that needs to occur almost instantaneously to best capture the available energy. The mechanism used to yaw is the tail. A balance of wind forces on the tail ensures that as the wind changes, the turbine automatically and instantaneously corrects its direction. Provision for a yaw bearing is thus necessary in the turbine body design. Additionally, a set of slip rings are required to prevent the electrical cables from the generator twisting down the inside of the tower.

The constant fluctuations in wind strength, and in particular the extreme wind speeds encountered in cyclones, need to be accommodated in the design. The control of rotor power through a range of wind speeds is known as furling, and the simple mechanism designed to achieve this takes advantage of increasing wind speeds to turn the rotor out of the wind direction. The furling mechanism alters the balance of moments about the yaw axis in order to change the rotor axis direction, and prevent the turbine from capturing excessively high wind speeds that threaten to overload the mechanical and electrical components. When the wind speed decreases, the furling mechanism needs to automatically return the system to its normal operating condition, so that regular operation may occur.

3.6.4.2 Design Considerations

The loads experienced by the body are due to several factors, including:

- Dead load of the rotor, generator and tail
- Live loads of the rotor thrust and the tail

The design needs to include a mounting point for the generator with provision for cables, a cover or housing for the cables to protect them from the elements and provision for slip rings. A main yaw bearing needs to be provided and a pivot block with bearings for the furling mechanism. The tail requires a boom and a vane to capture the wind. This entire assembly then needs to be attached to the top of the tower. Precision is required for the bearings and the generator mount and strength will be required to withstand all of the applied loads.

3.6.4.3 Material and Manufacture

Steel is the obvious material of choice for the turbine body, since it has the qualities of good machinability and weldability, high strength, and is readily available. The body will be designed to be fabricated from standard steel plates and structural members. Due to the dependence of the furling mechanism on the mass of the tail, the choice of material for the tail vane will affect the power control operation.

3.6.4.4 Reliability and Maintainability

Steel requires protection from corrosion and oxidation so a surface finish will be required. A painted surface will adequately provide this protection, and carefully selected, the colour will also add to the aesthetic quality of the SWT.

Servicing requirements will include lubrication of the bearings, general inspection of the condition, and replacement or repair of the slip rings. The bolts holding the tail vane to the tail boom need to be checked for adequate tightness. This will occur during the annual inspection and service.

3.6.4.5 Final Design

The geometry of the turbine is firstly defined by the generator and slip ring mounting requirements. The yaw and furl mechanisms will be designed, and will finalise the geometry of the body. The generator mounting details can be found in Appendix B.4. The concept for the yaw and furl mechanisms is described by Figure 3.15. The yaw axis is offset from the rotor axis so that the rotor thrust force creates a turning moment. This force is balanced by the wind force against the tail vane, which is offset at angle, θ_0, from the wind direction. In normal operation the thrust and tail vane forces remain balanced so as to keep the rotor axis parallel to the wind direction. The tail is pivoted about an inclined axis, with an angle of α so that the weight of the tail forces it into its normal position at the tail offset angle θ_0. As the wind speed increases the force on the tail overcomes the weight of the tail, changing the tail offset angle. This alters the balance of the yaw forces causing the turbine to rotate so that the rotor axis is no longer parallel to the wind direction. Figure 3.16 shows the SWT in a furled position.

The sum of forces about the yaw axis (O) is given by:

$$\sum M_O = 0 = F_{rotor} l_{rotor} - F_{vane} l_{vane} \tag{3.3}$$

Where

F_{rotor} = Thrust force of the rotor (N)

l_{rotor} = Rotor offset distance (m)

F_{vane} = Wind force acting normal to the tail vane (N)

l_{vane} = Distance from the yaw axis to the centre of area of the tail vane (m)

The force of the wind on any given area can be found by:

$$F = ma = m\frac{dv}{dt} = \frac{m}{dt}dv = \dot{m}v = \rho A v_{wind}{}^2 \qquad \text{(N)}$$

So for the rotor:

$$F_{rotor} = \rho A_{rotor} v_{wind}{}^2 \qquad \text{(N)}$$

And for the tail vane:

$$F_{vane} = \rho A_{vane} v_{wind}{}^2 \sin\theta_0 \qquad \text{(N)}$$

Equation 3.3 can now be rearranged to give:

$$\rho A_{rotor} v_{wind}{}^2 l_{rotor} = \rho A_{vane} v_{wind}{}^2 l_{vane} \sin\theta_0$$

Rearranging for θ_0:

$$\theta_0 = \sin^{-1}\left(\frac{\rho A_{rotor} v_{wind}{}^2 l_{rotor}}{\rho A_{vane} v_{wind}{}^2 l_{vane}}\right)$$

And this can be reduced to give:

$$\theta_0 = \sin^{-1}\left(\frac{A_{rotor} l_{rotor}}{A_{vane} l_{vane}}\right) \qquad \text{(rad)} \tag{3.4}$$

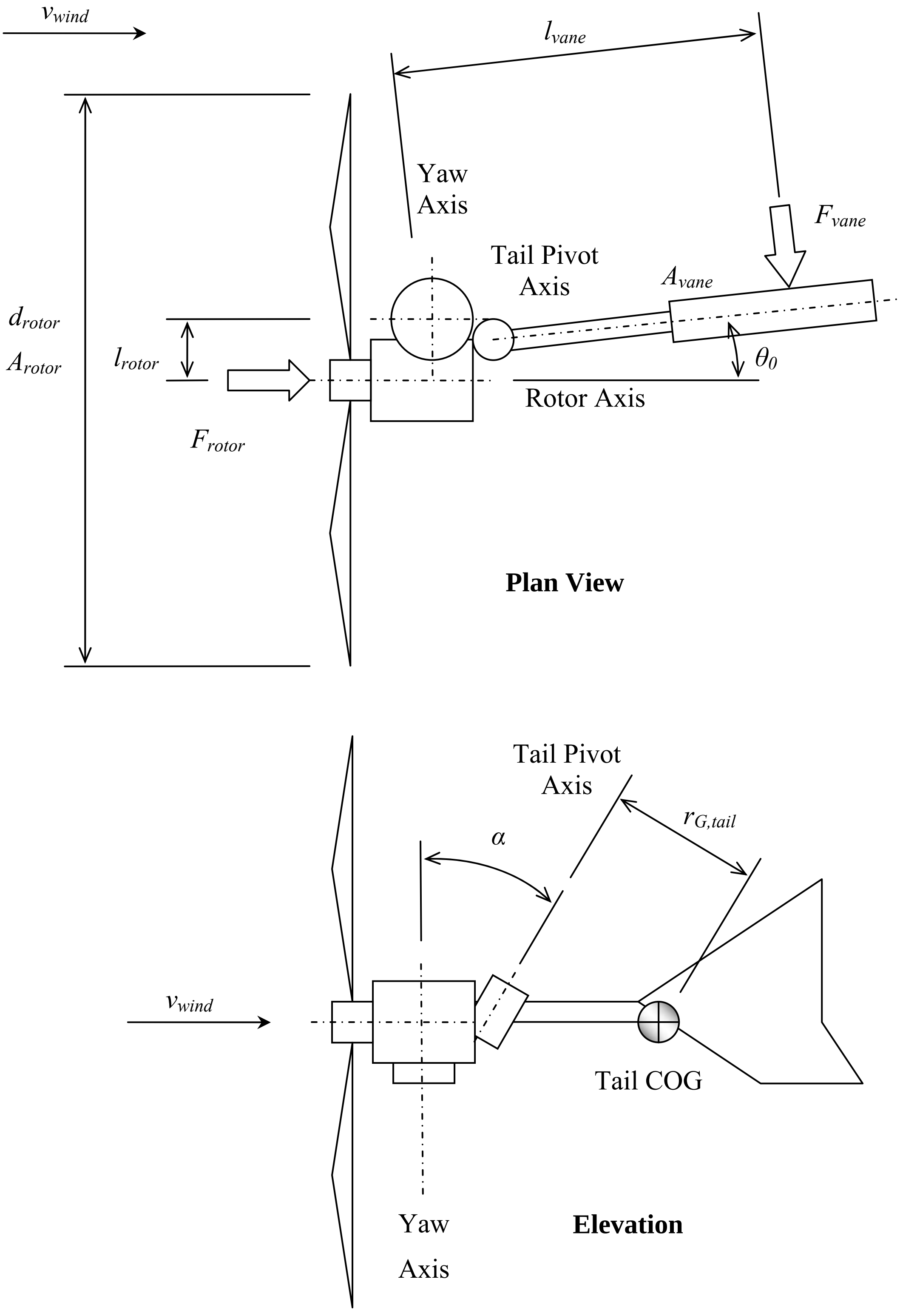

Figure 3.15 – Plan and Elevation views of Yaw/Furl Mechanism concept – normal operating position (author's original image 2008)

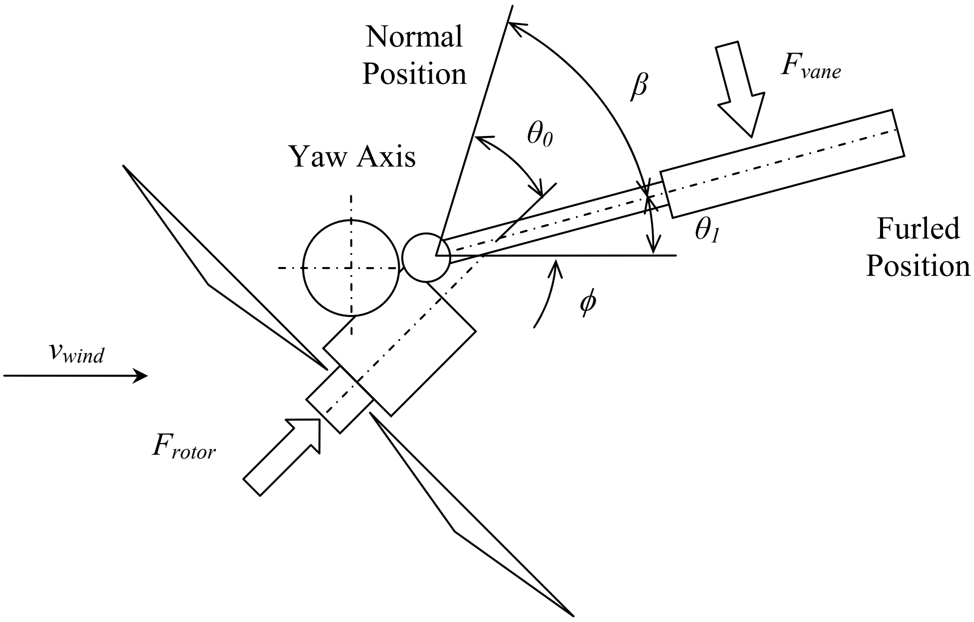

Figure 3.16 – Plan View of Yaw/Furl Mechanism concept – furled position (author's original image 2008)

Equation 3.4 demonstrates that the tail offset angle for normal operating conditions, θ_0, is independent of the wind speed, v_{wind}. This is an ideal situation because the turbine needs to remain stationary through a range of wind speeds without pivoting uncontrollably about the yaw axis. The force that holds the tail at an offset angle of θ_0 is the weight of the tail acting at the tail COG in a direction tangential to the arc scribed by the COG. The tail offset angle will remain in its normal operating position, as shown in Figure 3.15, as long as the wind force against the tail vane is less than the force of the tail weight.

Referring to Figure 3.17, it can be shown that the force caused by the weight of the tail is given by:

$$W_t = m_{tail} g \sin \alpha \qquad \text{(N)}$$

This force acts at the COG of the tail, so it needs to be transferred to the centre of area of the tail vane to determine the sum of forces acting on the tail:

$$P_t = \frac{W_t l_{tail}}{r_{G,tail}} \qquad \text{(N)}$$

Or,

$$P_t = \frac{m_{tail} g \sin \alpha l_{tail}}{r_{G,tail}} \qquad \text{(N)}$$

Where,

$r_{G,tail}$ = Distance from tail pivot axis to tail COG (m)

α = Tail pivot inclination angle (radians)

l_{tail} = Distance from tail pivot axis to centre of area of vane (m)

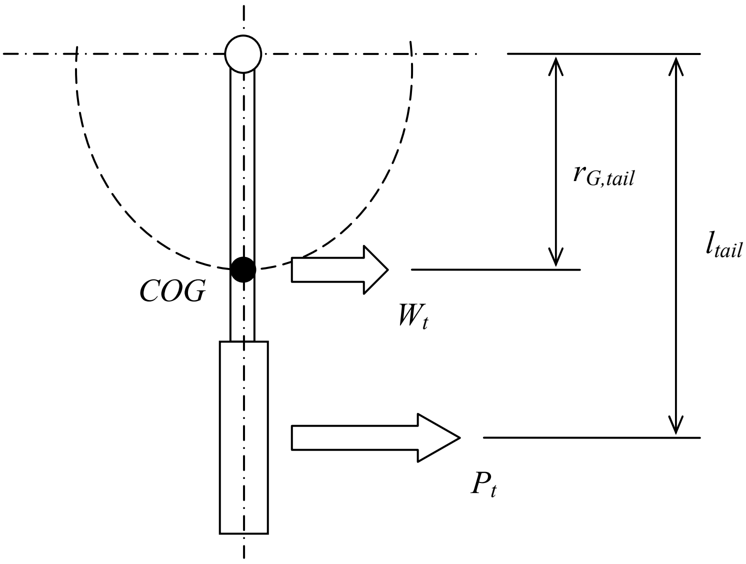

Plan View

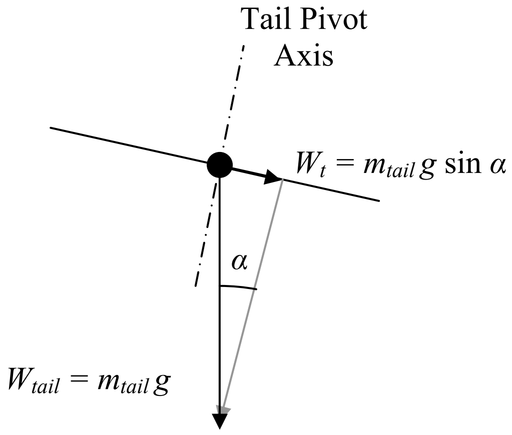

Elevation

Figure 3.17 – Plan and elevation views of tail pivot (author's original image 2008)

When the wind increases to a speed where the force on the tail vane, F_{vane}, is greater than the force opposing the rotation of the tail, P_t, the tail will rotate. The magnitude of the remaining force, which will be called the furling force, F_{furl}, is given by:

$$F_{furl} = F_{vane} - P_t \qquad \text{(N)}$$

The amount of rotation of the tail that this furling force causes is denoted by β, which can be determined by considering the energy balance of the rotating tail. The work done by the furling force is equal in magnitude to the potential energy of the tail at its new position:

$$E_P = W$$

$$m_{tail} g h_{tail} = F_{furl} l_{arc} \qquad (3.5)$$

Where,

l_{arc} = Length of arc scribed by the tail as it furls through the angle β (m)

h_{tail} = Height of the tail in its furled position (m)

Referring to Figure 3.18 it can be seen that the height the tail is lifted, h_{tail}, and the displacement of the tail, l_{arc}, are both functions of the furling angle, β. So Equation 3.5 can be rearranged to relate these values as follows:

$$\frac{l_{arc}}{h_{tail}} = \frac{m_{tail} g}{F_{furl}} \qquad (3.6)$$

Where,

$$l_{arc} = \beta l_{tail} \qquad \text{(m)}$$

$$h_{tail} = l_{tail} \sin\alpha - l_{tail} \cos\beta \sin\alpha \qquad \text{(m)}$$

Or,

$$h_{tail} = l_{tail} \sin\alpha \left(1 - \cos\beta\right) \qquad \text{(m)}$$

These can now be substituted into Equation 3.6:

$$\frac{\beta . l_{tail}}{l_{tail} \sin\alpha \left(1 - \cos\beta\right)} = \frac{m_{tail} g}{F_{furl}}$$

Which can be reduced and rearranged to give:

$$\frac{\beta}{(1-\cos\beta)}=\frac{m_{tail}g\sin\alpha}{F_{furl}}$$

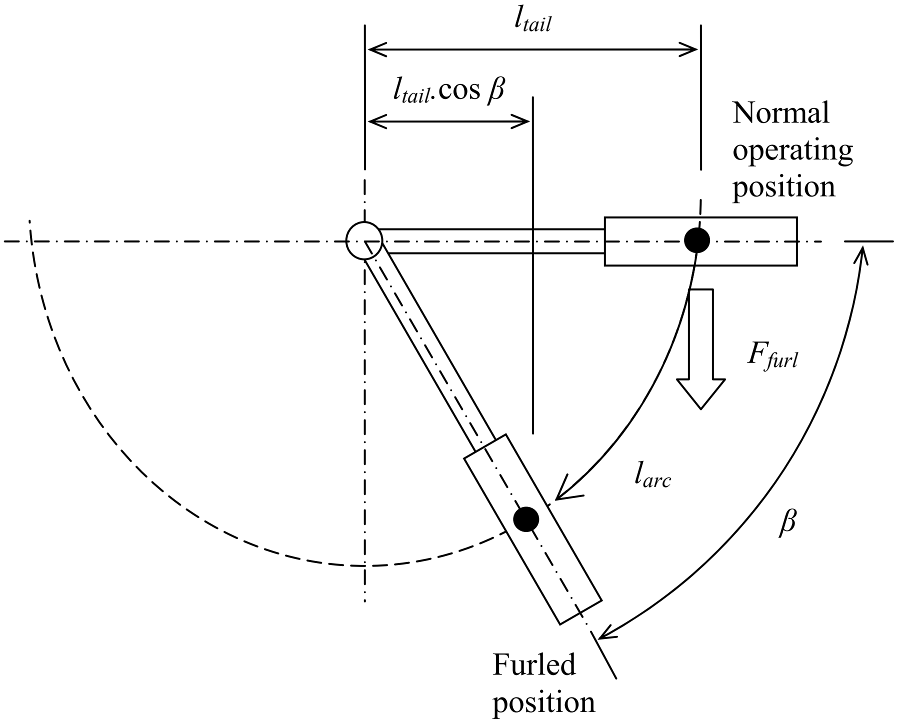

Plan View

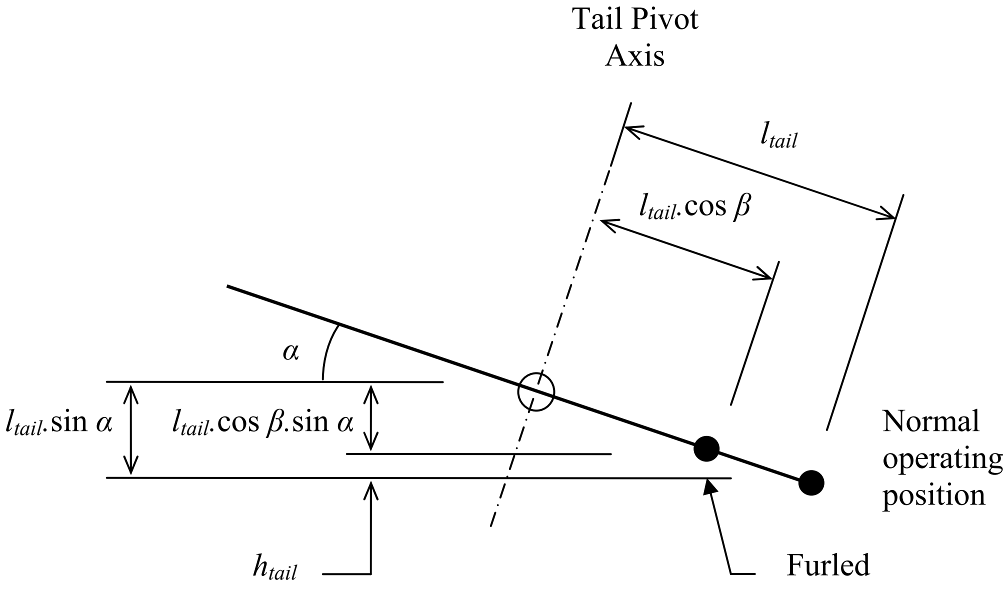

Elevation

Figure 3.18 – Plan and elevation views of tail pivot (author's original image 2008)

Once β has been determined the new yaw moments can be calculated to determine the new rotor axis direction. The power that can be extracted from the wind will be limited by the angle of the rotor axis to the wind direction, so the furling mechanism will achieve its objective of controlling the extracted power and the rotor speed.

Referring again to Figure 3.16, the new angle formed between the tail and the wind direction is given by:

$$\theta_1 = \theta_0 + \phi - \beta$$

Where,

ϕ = Angle between rotor axis and wind direction (radians)

So taking the moments about the yaw axis:

$$\sum M_O = 0 = F_{rotor} l_{rotor} \cos\phi - F_{vane} l_{vane} \sin\theta_1$$

This becomes:

$$\rho A_{rotor} v_{wind}{}^2 l_{rotor} \cos\phi = \rho A_{vane} v_{wind}{}^2 l_{vane} \sin\left(\theta_0 + \phi - \beta\right)$$

Rearranging:

$$\cos\phi = \frac{\rho A_{vane} v_{wind}{}^2 l_{vane} \sin\left(\theta_0 + \phi - \beta\right)}{\rho A_{rotor} v_{wind}{}^2 l_{rotor}}$$

This can be reduced to:

$$\cos\phi = \frac{A_{vane} l_{vane} \sin\left(\theta_0 + \phi - \beta\right)}{A_{rotor} l_{rotor}}$$

Using the following trigonometric identity:

$$\sin(u+v) = \sin(u)\cos(v) + \sin(v)\cos(u)$$

The equation can be rearranged to give:

$$\cos\phi = \frac{A_{vane} l_{vane} \left(\sin\left(\theta_0 - \beta\right)\cos\left(\phi\right) + \sin\left(\phi\right)\cos\left(\theta_0 - \beta\right)\right)}{A_{rotor} l_{rotor}}$$

Expanding the numerator:

$$\cos\phi = \frac{A_{vane} l_{vane} \sin\left(\theta_0 - \beta\right)\cos\left(\phi\right) + A_{vane} l_{vane} \sin\left(\phi\right)\cos\left(\theta_0 - \beta\right)}{A_{rotor} l_{rotor}}$$

And then dividing through by $\cos\phi$:

$$1 = \frac{A_{vane} l_{vane} \sin\left(\theta_0 - \beta\right) + A_{vane} l_{vane} \dfrac{\sin\left(\phi\right)}{\cos\left(\phi\right)} \cos\left(\theta_0 - \beta\right)}{A_{rotor} l_{rotor}}$$

Where,

$$\frac{\sin\phi}{\cos\phi} = \tan\phi$$

The above equation can now be rearranged for ϕ:

$$A_{vane} l_{vane} \sin\left(\theta_0 - \beta\right) + A_{vane} l_{vane} \tan\phi \cos\left(\theta_0 - \beta\right) = A_{rotor} l_{rotor}$$

$$A_{vane} l_{vane} \left(\sin\left(\theta_0 - \beta\right) + \tan\phi \cos\left(\theta_0 - \beta\right)\right) = A_{rotor} l_{rotor}$$

$$\sin\left(\theta_0 - \beta\right) + \tan\phi \cos\left(\theta_0 - \beta\right) = \frac{A_{rotor} l_{rotor}}{A_{vane} l_{vane}}$$

$$\tan\phi \cos\left(\theta_0 - \beta\right) = \frac{A_{rotor} l_{rotor}}{A_{vane} l_{vane}} - \sin\left(\theta_0 - \beta\right)$$

$$\tan\phi = \frac{A_{rotor} l_{rotor}}{A_{vane} l_{vane}} - \frac{\sin\left(\theta_0 - \beta\right)}{\cos\left(\theta_0 - \beta\right)}$$

$$\tan\phi = \frac{A_{rotor} l_{rotor}}{A_{vane} l_{vane}} - \tan\left(\theta_0 - \beta\right)$$

And finally:

$$\phi = \tan^{-1}\left(\frac{A_{rotor} l_{rotor}}{A_{vane} l_{vane}} - \tan\left(\theta_0 - \beta\right)\right)$$

So the angle that the rotor axis makes with the wind direction, ϕ, has been determined for any furling angle, β. The angle ϕ can then be used to determine the output power of the SWT rotor at any given wind speed, by use of the power equation, and considering the angle between the rotor axis and the wind direction:

$$P = C_P \eta \frac{1}{2} \rho A_{rotor} v_{wind}{}^2 \cos\phi \qquad \text{(W)} \qquad (3.7)$$

The result of this mathematical formulation of the furling mechanism is that for any given wind speed, the output power of the turbine can be calculated. A Microsoft Excel spreadsheet was developed to allow the system variables to be adjusted to modify the output power curve. The undefined variables are:

m_{tail} = Mass of tail (kg)

A_{tail} = Area of tail vane (m^2)

l_{tail} = Distance from tail pivot axis to centre of area of vane (m)

l_{vane} = Distance from the yaw axis to the centre of area of the tail vane (m)

θ_0 = Initial tail offset angle (radians)

α = Tail pivot inclination angle (radians)

The values of these variables were adjusted in conjunction with the development of the SolidWorks model of the turbine body. This ensured that the values used were physically realistic. By tuning the design manually an optimum design is difficult to achieve, but nevertheless a successful furling mechanism has resulted. The power curve of the turbine for a range of wind speeds is shown in Figure 3.19. It may be observed that as the wind speed increases the extracted power increases exponentially until somewhere around 14 m/s wind speed. Beyond this wind speed the furling mechanism is activated, reducing the power output of the SWT, but protecting it from critical overload.

The designed turbine body is shown in Figure 3.20. The generator mounts to the large circular disk, through which the electrical output cables are fed. These cables remain enclosed within the turbine body where they connect to the slip rings which are mounted in the bore of the main pivot. An opening has been provided at the top of this pivot to allow access to the slip rings and cables. The axis of the main pivot is the yaw axis, and thus, there is provision for bearings. Plain bronze bearings have been selected due to their multi-directional loading capabilities, self-lubrication, and long service life. These bearings also provide some dampening of the turbines yaw speed so as to reduce any gyroscopic loads that are induced. Finally, the image shows the inclined tail pivot axis, by which the furling mechanism achieves power and angular velocity control.

An image of the turbine with generator, blades, hub, turbine body, tail boom and tail vane have been shown in Figure 3.21. The manufacturing drawings for the turbine body and all of the furling mechanism components are provided in Appendix B.5.

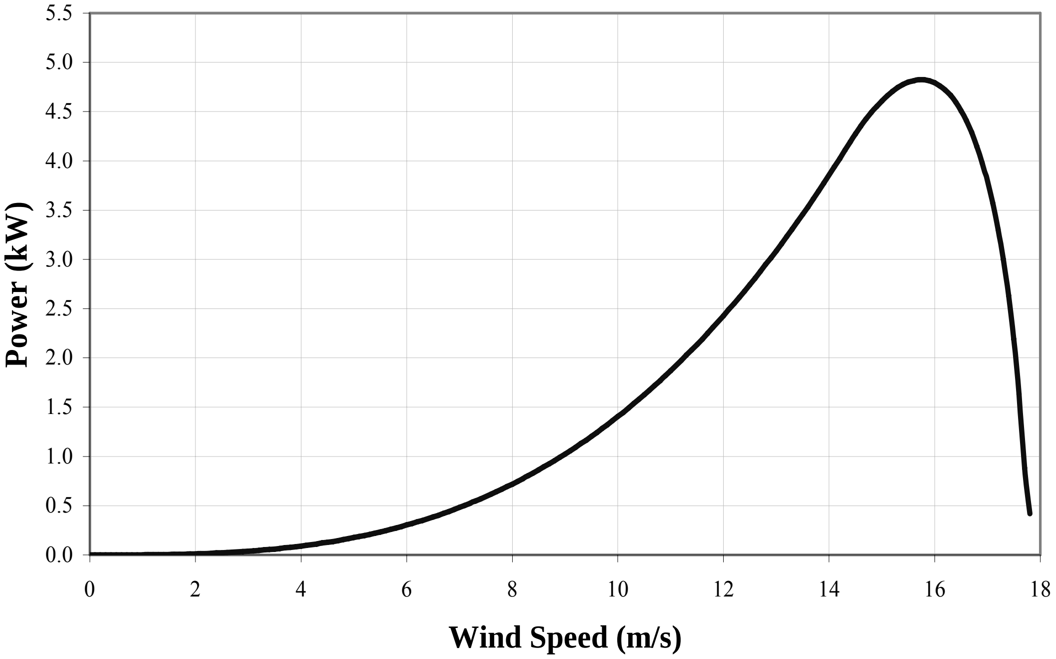

Figure 3.19 – SWT Power curve (author's original image 2008)

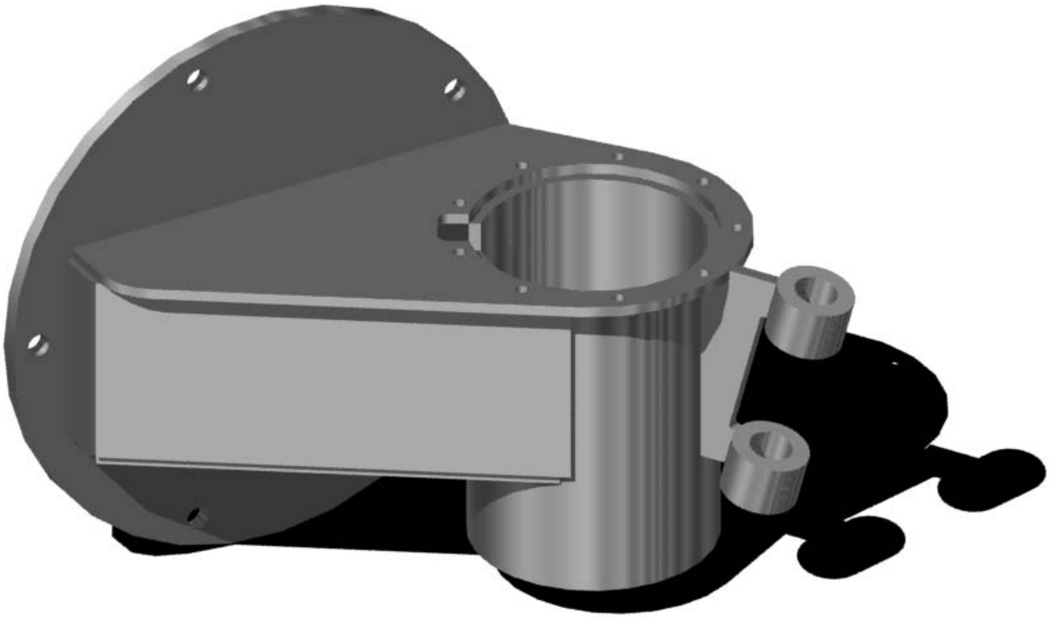

Figure 3.20 – Turbine body (author's original image 2008)

Figure 3.21 – Image of turbine (author's original image 2008)

3.6.5 Tower

3.6.5.1 Functional Description

The tower is required to elevate the rotor to maximise the available wind speed and minimise any turbulence. As the tower height is increased, a greater amount of wind power can be extracted. However, increased tower height leads directly to an increased overall cost, in addition to higher costs for transportation and erection. It also leads to more difficult servicing. The tower supports the turbine body via a rotating joint that contains the yaw bearings and slip rings. The yaw axis is a vertical axis aligned with the centre of the tower. A gin pole, which is a device used as a lever to assist in lifting, is required along with a base that provides a point for pivoting the tower upon lifting and lowering, and a foundation that supports the SWT mass, and firmly anchors the entire assembly to the ground.

3.6.5.2 Design Considerations

As with the loading on the turbine itself, the tower will experience highly erratic loads during its lifetime. Furthermore, the tower is required to withstand randomly fluctuation loads that can cause sudden and catastrophic failure by fatigue. A design of minimal weight is preferable, for transport and installation purposes, and as such, GFRP will be considered for the tower design.

A mounting point for the turbine body is generator with provision for cables, a cover or housing for the cables to protect them from the elements, provision for slip rings, and for the main yaw bearings, and finally a pivot block with bearings for the furling mechanism

3.6.5.3 Material and Manufacture

As mentioned above, the material of choice for the tower is glass fibre reinforced polymer (GFRP). The most common manufacturing method for this material is currently manual lay-up. This can lead to benefits and disadvantages. The first major disadvantage is that imperfections are easily introduced, and the risk of faults in the material is higher than, for instance, metals that are purchased through reputable merchants. The second disadvantage is the high cost of manual labour and time in producing each tower. This disadvantage may, however, be offset by the ability of skilled employees of the University of Southern Queensland to produce the tower in-house. In the event of multiple towers required, the work may need to be outsourced, resulting in much greater costs.

3.6.5.4 Reliability and Maintainability

Besides general inspection of the condition of the tower, no maintenance is required. A gel-coat is commonly used to eliminate the problems associated with degradation of the GFRP material by UV exposure.

3.6.5.5 Final Design

A free-standing tower configuration has been selected over guyed or lattice type towers due to the increased aesthetic amenity of the structure. Lattice towers are inherently unsafe, since they allow a person to climb the structure, and are more difficult to lower to the ground for servicing. A guyed tower requires guy wires to anchor the tower at several points around the base. This means that the SWT requires a greater ground area, which may be prohibitive for a domestic user. A free-standing tower requires that the entire structure be lowered to the ground for servicing. Safety precautions need to be strictly adhered to during raising and lowering of the tower, but the ability to service the machine at ground level is a large improvement upon the safety of lattice towers where servicing needs to take place at the raised hub height.

The final design requires a hub height of 10 m from ground level. The free-standing structure has a hollow conical shape, with a larger diameter and greater wall thickness at the base, tapering to a smaller diameter, lighter wall thickness at the top. The heavier section provides strength where the bending stresses are highest, while the lighter top section removes weight from the structure where high strength is not required. The base of the GFRP tower will be held captive by a steel sleeve, with a pivot point near ground level. The tower is to be raised and lowered by using a manual or electric winch attached to the gin pole.

During normal operation the loads on the tower are due to the dead weight of the turbine, the thrust force of the rotor, and the wind force against the tower itself. Upon raising or lowering the tower the weight of the tower will also create a bending moment at the base. The normal operating loads will be considered first.

From the design of the furling mechanism in Section 3.6.4 it was found that the maximum thrust force on the rotor was 1406 N, at a wind speed of 15.4 m/s. The greatest wind speed was 17.8 m/s, with a rotor thrust force of only 100 N. Thus it is apparent that the first case of highest thrust force will yield the greatest overall force on the tower. The force caused by the wind on the tower can be determined by taking the average force at the half-height of the tower, and then considering the aerodynamic drag on the tower, which for this case will be simplified as a long cylinder.

The average wind speed on the tower can be determined by considering Equation 3.1, which calculates the wind speed at any given height. Wind speeds were calculated at 0.2 m increments, and averaged over the entire height of the tower, such that a wind speed at the 10 m hub height of 15.4 m/s resulted in an average wind speed, v_H, of 13.3 m/s at an elevation of 5 m. The drag force on the tower can be approximated using the assumption of external, incompressible and viscous flow over an object. In this instance the object will be considered a long cylinder. The drag force on the tower is given by (Fox, McDonald & Pritchard 2004):

$$F_D = \frac{1}{2} C_D A_{tower} \rho v_H{}^2$$

Where,

C_D = Coefficient of drag on the tower

A_{tower} = Surface area of the tower (m^2)

The drag coefficient, C_D, can be determined by calculating the Reynolds number for the air flow, and reading the corresponding value from the empirically derived data of Figure 3.22.

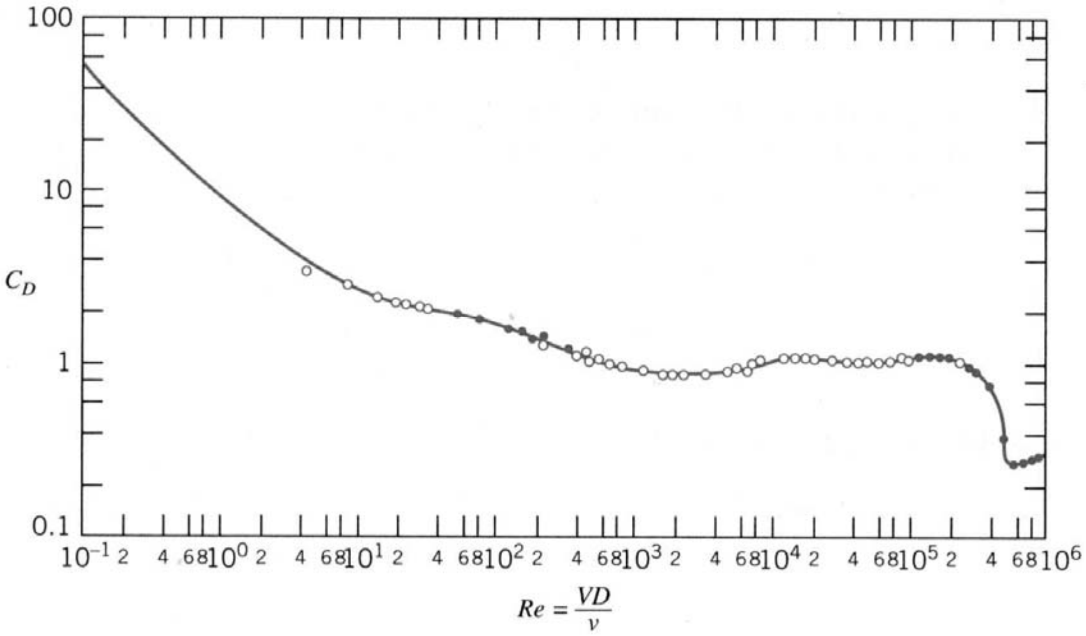

Figure 3.22 – Drag coefficient for a smooth circular cylinder as a function of Reynolds number (Fox, McDonald & Pritchard 2004)

The Reynolds number, Re_D, is given by (Fox, McDonald & Pritchard 2004):

$$\text{Re}_D = \frac{\rho v_H d_{turbine}}{\mu}$$

Where,

$d_{turbine}$ = average diameter of tower (m)

μ = Dynamic viscosity (kg/ms)

At this point the diameter of the tower is unknown, so an iterative approach is required. Taking the values of 250 mm for the average tower diameter, and 1.79×10^{-5} kg/ms (Fox, McDonald & Pritchard 2004) for air at standard pressure and temperature, the Reynolds number is calculated as 2.2×10^5, and the drag coefficient can be read off the curve of Figure 3.22 as $C_D = 1.0$.

Thus, the drag force on the tower can be calculated and the result is a force of 267 N acting at the midpoint of the tower, that is, $H = 5$ m. The bending moment on the tower can then be calculated using this force, and the rotor thrust force of 1406 N. The calculated bending moment is 15,395 Nm, or this can be expressed as a single force acting at the top of the tower of 1540 N.

As yet the geometry of the tower is unknown, though an average diameter of 250 mm has been assumed. An iterative approach is required to determine the optimum geometry, based on the applied force and the maximum permissible stress. The latter is based upon the recommendations of the project supervisor, Dr. Jayantha Epaarachchi, from his previous experience and knowledge. Dr Epaarachchi advised a maximum stress of 20 MPa, to allow for fatigue of the tower over its life-time. The following material design was also recommended:

- 0-90° ply direction Glass-fibre Woven Cloth, 800 grams per square metre (gsm)
- 60 percent Volume fraction
- 1mm Chopped-Strand Matting (CSM) external layer

To conduct the analysis using ANSYS Workbench V.10 it is required to enter the material properties. The composition of the laminate can be described by Figure 3.23.

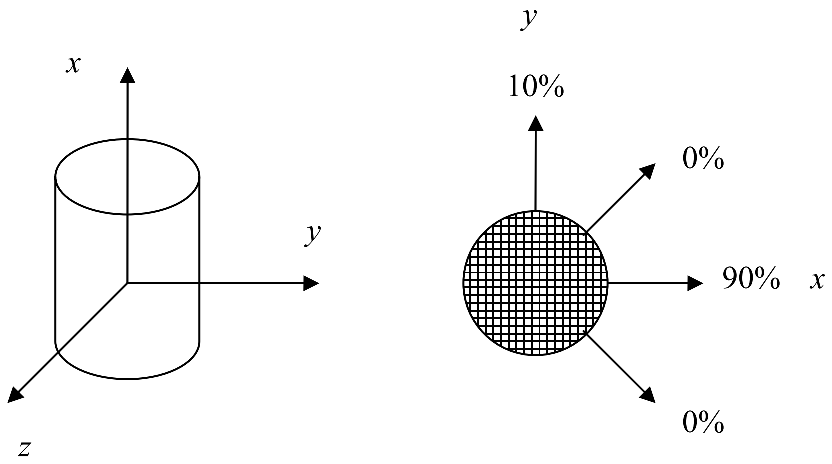

Figure 3.23 – Composition of GFRP laminate (author's original image 2008)

From the above laminate composition the characteristic properties of the materials orthotropic elasticity can be determined. Gay, Hoa and Tsai (2003) provide tables for determining the material properties, and these have been included for reference in Appendix B.6. From these tables the material properties are (Gay, Hoa & Tsai 2003):

Longitudinal Elastic Modulus

$E_x = 41.86$ GPa $E_y = 15.36$ GPa

Shear Modulus

$G_{xy} = 4500$ GPa

Poisson's Ratio

$\upsilon_{xy} = 0.23$ $\upsilon_{yx} = 0.09$

Thermal expansion

$\alpha_x = 0.6 \times 10^{-5}$

A first estimation of the tower geometry takes a base diameter of 300 mm with a wall thickness of 20 mm, tapering to a top diameter of 150 mm with a 10 mm wall thickness. After entering the material data, applying the loads and restraints to the model, and running the FEA solution, the results of the analysis were obtained. Figure 3.24 shows the stress distribution in the tower, where the maximum stress was found to be 14.3 MPa. Thus the first estimate of the geometry yields stress levels below the permissible maximum of 20 MPa.

The raising and lowering of the tower requires the use of a winch which is anchored at a fixed foundation, and connected to the gin pole. By the use of a pivoted base, the tower can be safely raised and lowered. The final mass of the tower is 300 kg, so the bending moment upon raising and lowering can be determined. Taking a gin pole length of 3 metres, with an anchor point 3 metres from the base pivot point (see Figure 3.25), the maximum bending moment created is 16.3 kNm. Again, this can be taken as a single force, of 1630 N, acting at the top of the tower. The analysis was run again, resulting in a maximum stress of 15.1 MPa. The stress is below the 20 MPa maximum, and is deemed acceptable.

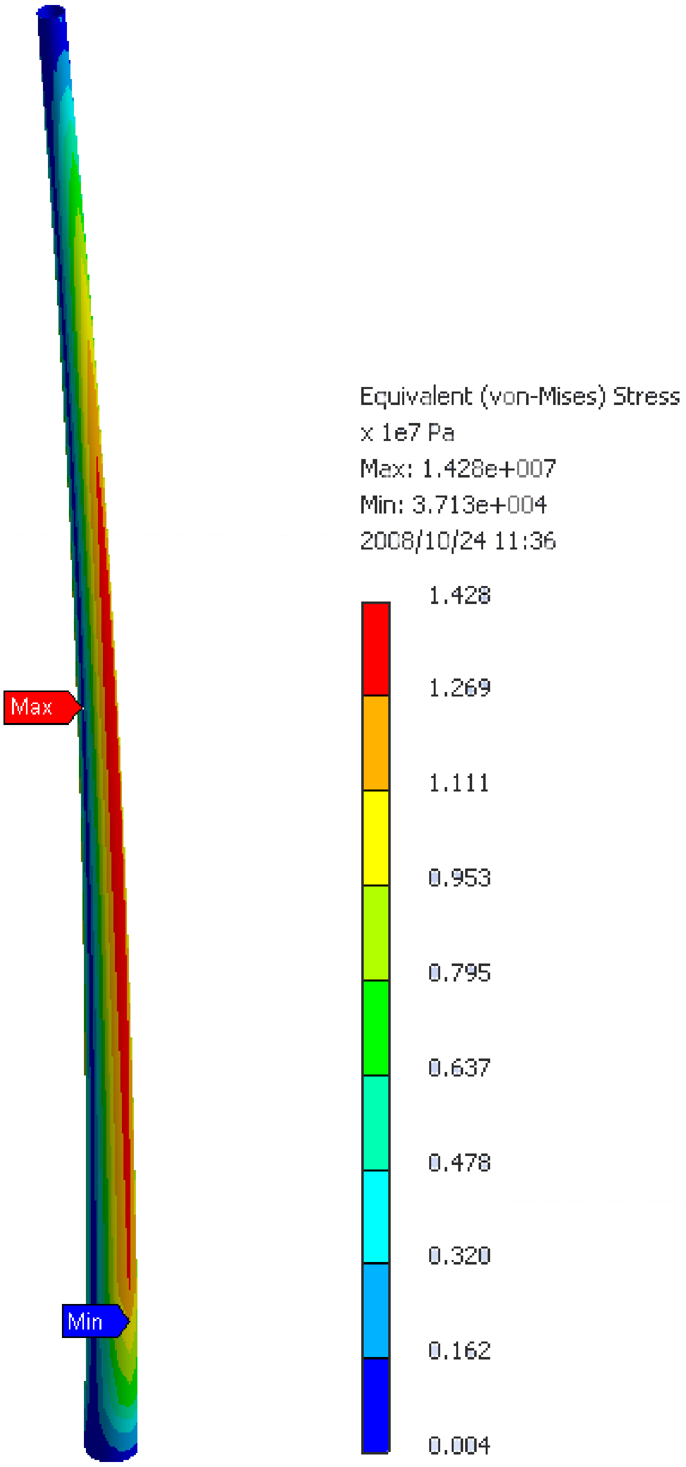

Figure 3.24 – GFRP Tower FEA analysis results (author's original image 2008)

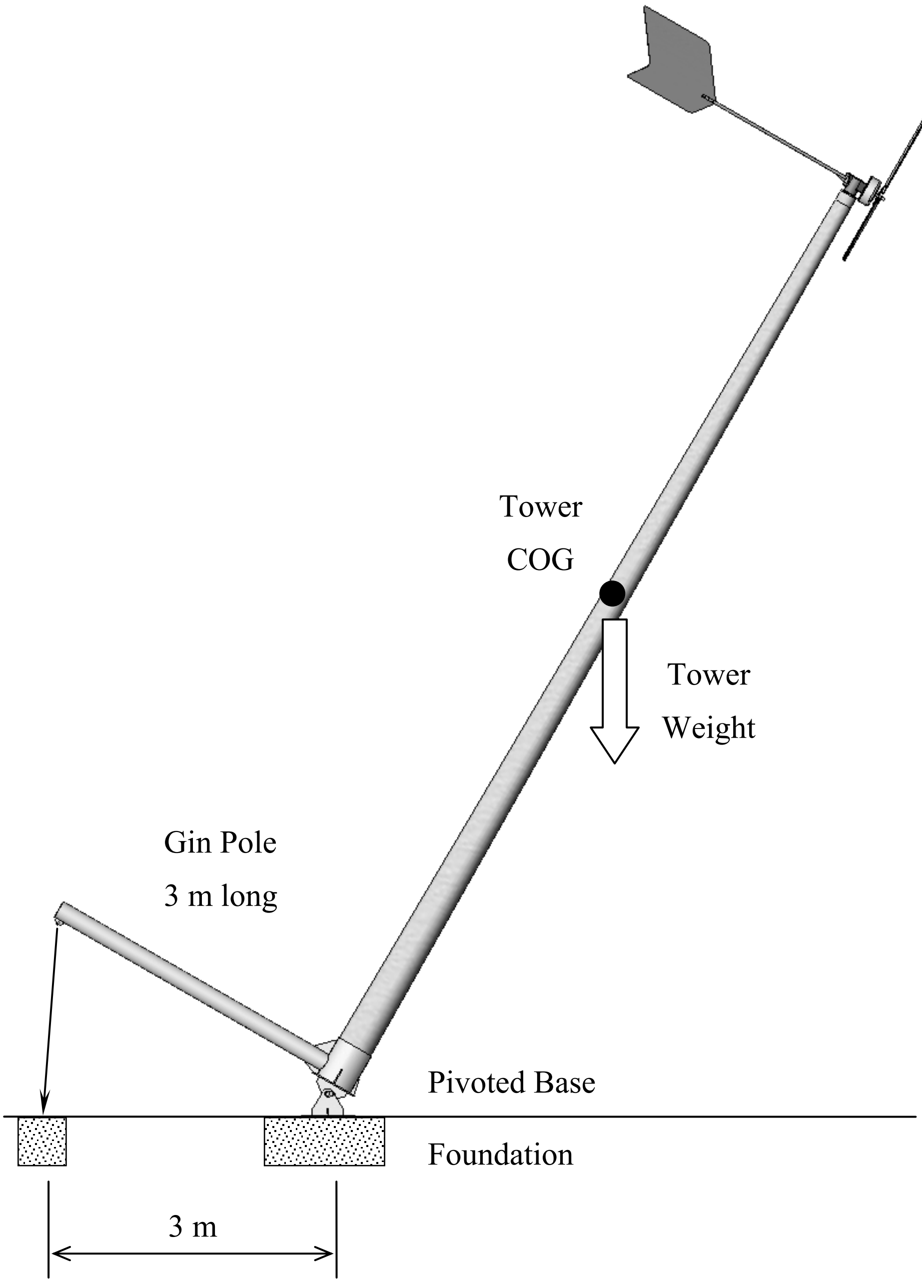

Figure 3.25 – Raising/Lowering of Tower (author's original image 2008)

3.6.6 Electrical and Control Systems

To finalise the design of the SWT the electrical and control components need to be considered. To transfer the power from the generator to the base of the tower a length of cables will be required. The cables then need to be fed into a controller, which will convert the voltage to DC through the use of a rectifier, and regulate the power to the batteries to prevent overload. The batteries need to able to withstand constant discharge and recharge cycles, and therefore need to be of a higher standard than conventional batteries, such as those used in vehicles. Lightning protection is required to protect the entire electrical system.

The controller is device used to regulate the power to the batteries during the operation of the SWT, and in many instances include the rectifier required to convert the AC output voltage of the generator to DC for battery charging. Controllers monitor the voltage sent to each battery in the bank, and typically divert any excess power to a dump load to protect the batteries from overcharging. A standard controller is available at approximately 1200 Australian dollars (AUD) (Energy Matters 2008).

Deep cycle batteries will be a suitable choice since their construction facilitates the delivery of sustained power without high drainage of current over long time periods. Repeated discharge and recharge cycling is less detrimental to the condition of the battery and it is able to deliver steady power for the owners intended application. Deep cycle batteries have a long service life, which is ideal for a SWT installation. Since the end use of the generated power is unknown, a basic battery package will be specified. Further investigation into the real battery loading cycles would enable a more suitable battery selection. A 200 amp hour (Ah) battery has an approximate retail cost of 600 AUD (Batteries Plus 2008).

Lightning protection is often achieved through the use of metal oxide varistors, which are an inexpensive electrical device that shunt currents caused by extreme voltages, such as spikes typically associated with a lightning strike. The total system cost for the electrical and control devices is estimated at 2000 AUD.

3.6.7 Implementation

Finalisation of the SWT design requires consideration of transport to site, assembly, installation, maintenance, operation and decommissioning after its design life. The complete SWT mass of approximately 600 kg is not a large weight for normal industrial freight. The length of the tower, however, could prove to be problematic.

Onsite assembly is possible due to the simplification of many of the parts, but it would be expected that two service technicians or trained representatives would accompany the SWT to site to perform this task. As such, installation and commissioning would be undertaken professionally, and during this time the procedures required to assemble and install the SWT could be demonstrated to the owner. From the author’s personal experience, two trained service technicians to assemble and install the SWT at the location in the Torres Strait Islands would cost approximately 120 AUD per hour per technician. This work could be completed in one normal working day, and would require return flights for the technicians at an approximate cost of 800 AUD. Thus, the total cost for assembly, installation, and commissioning of the SWT would be approximately 2720 AUD. This cost needs to be factored in to the capital cost of the SWT unit.

Operation and maintenance of the SWT needs to be performed by the owner. It is normal practice to provide operation and maintenance manuals with any product, and these documents would detail the procedures required for safe completion of the regular maintenance programs. No capital cost is involved. The ongoing costs associated with annual servicing of the SWT are estimated at 100 AUD per annum.

Decommissioning of the SWT may need to occur after the 20 year design life. This involves the removal of the entire device, including the tower and all foundations, and any subsequent replacement of soil to restore the site to its original condition. For the purpose of this project decommissioning costs will be ignored since the SWT is intended to be purchased by a private domestic user, so the responsibility of the turbine and the site after the design life is borne by the owner.

3.6.8 System Specification

Table 3.5 shows the specifications of the designed system, and it facilitates direct comparison with those models compared in Appendix B.1. Figure 3.19 shows the power output of the SWT. The electrical output matches the output specifications of the generator, as shown in Figure 3.10 and 3.11.

The SWT has a rated output of 1 kW at a wind speed of 10 m/s. The turbine begins furling at 14.4 m/s, limiting the maximum power to 4.8 kW. The automatic furling mechanism prevents the turbine from operating at wind speeds greater than 18 m/s, so that the maximum loading conditions for various components are not exceeded.

Recalling that the annual average wind speed at the target location, the Torres Strait Islands, was 6.6 m/s (see Section 3.5), the annual energy yield of the turbine at this wind speed is approximately 1475 kWh.

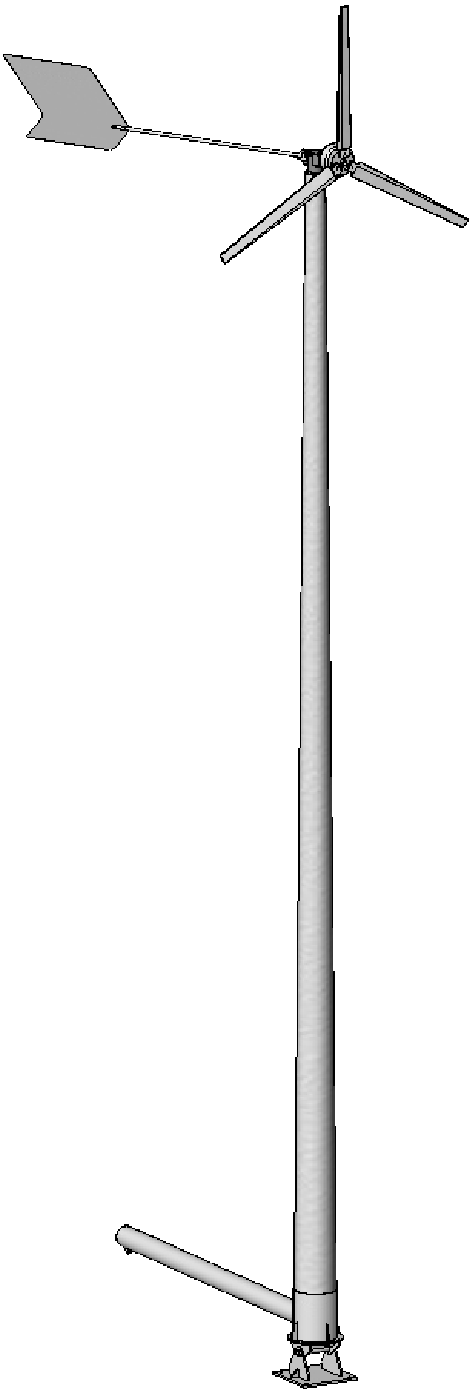

Figure 3.26 – USQ SWT SolidWorks assembly (author's original data 2008)

Manufacturer	**USQ**
Model	USQ 1kW SWT
Origin	Australia
Power	
Rated Power (W)	1000
Max. Power (W)	4800
Wind Speed	
Rated Wind Speed (m/s)	10
Starting Wind Speed (m/s)	3
Furling Wind Speed (m/s)	14.4
Rotor Speed	
Rated Rotor Speed (rpm)	440
Max. Rotor Speed (rpm)	858
Tip Speed (m/s)	70.0
Rotor	
No. blades	3
Diameter (m)	2.6
Rotor Surface Area (m^2)	5.31
Blade material	GFRP
Generator	
Type	PMG
Rated voltage (V)	24 VAC
No. of phases	3
Power Control	Automatic furling
Slip Rings	Yes
Orientation System	Passive by tail
Brake System	None
Controller	Included
Tower	
Type	Free-standing GFRP
Height (m)	10
Annual Yield (kWh/yr)	
Avg. wind speed 4 m/s	329
Avg. wind speed 4.5 m/s	467
Avg. wind speed 5 m/s	642
Avg. wind speed 5.5 m/s	854
Avg. wind speed 6 m/s	1106
Avg. wind speed 7 m/s	1759
Avg. wind speed 8 m/s	2624
Avg. wind speed 10 m/s	5128

Table 3.5 – USQ SWT Specification (author’s original data 2008)

Table 3.6 shows a breakdown of the component costs that comprise the total capital sum. The tower cost was provided by Rapid Fibreglass (pers. comm., 8 July 2008), and transport of the SWT equipment from Toowoomba to the Torres Strait Islands was discussed with Loadshift Transport System (M.F. pers. comm., 24 October 2008). The complete set of component drawings (Appendix 6.5) was supplied to several manufacturers, but only one quote was received from Knox Engineering of Ingleburn, NSW (P.G. pers. comm., 22 October 2008).

Item	**Value per one off**	**Value per hundred off**
SWT		
Generator	570.00	465.00
Rotor Blades	423.00	398.00
Hub	185.00	140.00
Turbine Body & Furl Mechanism	3,795.00	2,663.00
Tower	2,500.00	2,250.00
Gin pole & base plates	805.00	640.00
Controller	1,200.00	1,080.00
Batteries	600.00	540.00
Ancillary components	200.00	200.00
Total SWT Cost (AUD)	10,278.00	8,376.00
Installation		
Transport of Equipment	8,180.00	8,180.00
Transport of Personnel	800.00	800.00
Labour	1,920.00	1,920.00
Total Installation Cost (AUD)	10,900.00	10,900.00

Net Capital Cost (AUD)	21,178.00	19,276.00

Table 3.6 – USQ SWT System Cost (author's original data 2008)

3.7 Summary

A conceptual design was developed that was based on conventional HAWT designs. The system components were identified, and the basic theory behind wind power generation was investigated. This provided direction for undertaking the design.

The first part of the methodology was to identify a target location in regional Queensland. This was achieved by narrowing the search area to locations outside the electricity distribution network, and within zones with high annual average wind speeds. The data used to do this was taken from the Ergon Energy website, as the major provider of electrical power in Queensland, and the BOM, with its freely available 9am and 3pm data. The Torres Strait Islands was identified as being a viable target location for its high annual average wind speed, the potential benefit to the community and their willingness to adopt wind turbine technology.

The second part of the methodology focused on the design of the components of the SWT. A conceptual design was proposed, and the individual components were then developed further to refine the original concept. The design has resulted in a SWT capable of meeting the power requirements set forth in the project objectives, with an innovative automatic furling mechanism, a GFRP tower and consideration of transportation, assembly, installation, operation, maintenance and decommissioning.

The specifications of the system were summarised in Table 3.5, and the total systems costs were broken down in Table 3.6. The designed SWT is found to be comparable with similar designs on the market (Appendix B.1).

Chapter 4 Data Analysis

4.1 Introduction

This chapter aims to evaluate the proposed design. This will be achieved through examination of the proposed system and its constituent components, and a brief Cost Benefit Analysis. The design evaluation will consider each of the major subcomponents and critically assess the methodology employed for each. Where possible, improvements to the conceptual ideas or design techniques will be suggested.

The Cost-Benefit Analysis method assigns a monetary value to the inputs and outputs of a project and compares the results. In a simple sense, if the value of the benefits outweighs the value of the costs, the project can be deemed worthwhile, and taken to the next stage of planning. This tool will be used to analyse the proposed SWT project to determine its financial feasibility.

4.2 Design Evaluation

4.2.1 Target Location

Investigation of BOM and ABS site data and Ergon Energy information of locations outside Queensland's electricity distribution network led to the selection of a target location, namely, the Torres Strait Islands. The wind data that was acquired was found to be suitable for the scale of the project, and at a convenient and consistent height that enabled direct comparison of sites across Queensland.

The identification of a broader market that could potentially be targeted was equally important. It has been determined that despite possessing lower wind resources than other areas in Australia it is feasible to utilise wind power to offset grid or diesel-generated electricity.

Further investigation of the wind as a resource highlighted the benefits of local topographical features in small wind energy generation. It was determined that features such as small hills can enhance the quality of the available wind resource.

4.2.2 Conceptual Design

A conceptual design was established that specifically aimed at simplification of the SWT design. Current information on wind turbine design relates primarily to large scale machines, so many of the conceptual ideas were drawn from the available information, requiring innovative ideas to facilitate simplification of the design. The products compared in Appendix B.1 were also used as a benchmark; however, the conceptual design was developed independently so that a unique design was successfully achieved.

To be critical of the conceptual design, it is recognised that an array of alternatives were not considered, an example of which is the selection of a HAWT configuration from as early as Section 2.4.3. However, it was established from the outset that the scope of the project was very wide, requiring consideration of an entire machine design from the background research, to the conceptual design, to consideration of decommissioning in 20 years time. It was necessary to narrow the focus, and at times this needed to occur at the expense of the consideration of equally feasible alternatives.

4.2.3 Final Component Designs

Evaluation of the final component designs concludes that, generally, each component was successfully designed to a degree of comprehensiveness that enabled the following achievements to be fulfilled:

- A 3D parametric model of each component
- An assembly of all components
- Manufacturing drawings of all designed components
- A quote for the complete set of components, including “one off” and “one hundred off” prices to show the reduction in price that can be achieved by mass production

The hub was the first component considered in the SWT design. The material and manufacturing methods were examined, and the reliability and maintainability of the component were considered. One load case was investigated that determined the stresses caused by the inertial forces of the rotating blades. The FEA was conducted with the use of Cosmos as an add-on to SolidWorks. Ideally, a second load case for the gyroscopic forces caused by simultaneous blade rotation and turbine yawing could have been considered. Unfortunately, time did not permit the investigation of this load case.

The turbine body, with yawing and furling mechanisms was perceived as an innovative and unique design, and considerable effort was spent in optimising its power control performance. Due to this, no time remained to undertake FEA on the turbine body and the associated parts. The furling mechanism used the weight of the tail to force the tail into its normal operating position, where the yaw moments were balanced so as to keep the rotor axis aligned with the wind direction. Upon increasing wind speeds the weight of the tail was overcome, turning the tail, thereby changing the balance of yawing forces. This would lead to a decrease in the power captured by the turbine. The success of the design is in the elimination of parts such as springs, hydraulically or pneumatically operated brakes, or other devices that would add to the complication and expense of the system. The failure of the design, however, is in the lack of true power control. Once a maximum wind speed has been reached the furling mechanism shuts down the SWT so that no power is generated. An improved solution to this problem would enable the turbine to continue operating in extreme wind speeds, while limiting the rotor speed and power extraction.

The tower was designed with GFRP, a material with which the author has had very little previous experience. The material properties were determined and entered into the FEA software package so that an analysis could determine the maximum stress in the structure under high rotor thrust force, and raising/lowering forces. The pivoted base of the tower was not a unique concept, but the design was approached in a unique way. The design enables relatively simple raising and lowering of the tower, negating the need for an integrated ladder, thereby enhancing the inherent safety. To improve the integrity of the design an analysis of the vibration of the tower, particularly with avoiding the first natural frequency induced by the rotor, should be considered.

Finally, comparative prices for all parts were not able to be sourced. Since the project had no industry sponsor, difficulties arose in obtaining quotes. Despite efforts to conceal the fact that the SWT was never intended to be manufactured, interest from fabricators and manufacturers declined when no industry association was apparent. The quote obtained is deemed satisfactory, and from the author's personal experience in engineering workshops the prices quoted are sound and reasonable.

4.2.4 Bought-in Component Selection

The selection of bought-in components was conducted by investigating several alternatives, and making a decision based on component performance and price. This methodology successfully resulted in the selection of the generator and the rotor blades. Difficulty was experienced in sourcing reputable and proven products, since the development of SWT technologies is only recent. Australian suppliers were not located for either SWT generators or blades, hence, only products from foreign companies could be considered. Regardless, options were considered and competitive prices were obtained for the supply of one off, and one hundred off. This was done to determine the cost saving that could be achieved through greater production runs.

A controller and batteries were not sourced from any specific supplier, although it was determined that both components could were available through Australian companies. To improve the selection process for these components it would have been desirable to consider alternatives, but time was not permitting.

Ancillary components such as fasteners, bearings, electrical cables, and materials for the foundation were not sourced, but have been accommodated in the capital cost.

4.2.5 System Integration

The methodology has resulted in a complete design that could potentially be taken from its current stage to one of manufacture and implementation. The design that has been developed has considered not only the mechanical and electrical components, but also the transport, assembly, installation, operation, maintenance and decommissioning of the design. So, although certain aspects of the design may have been improved by greater depth of design and analysis, and through comparison of multiple alternatives, the system as a whole is a well-rounded design.

The methodology has also resulted in a specification of the designed SWT and an overall cost. A table that compares currently available wind turbines has been made available in Appendix B.1 to facilitate direct comparison with this design.

4.3 Cost Benefit Analysis

Campbell and Brown (2003) define Cost-Benefit Analysis (CBA) as a process of identifying, measuring and comparing the social benefits and costs of an investment project. This technique will be used here to appraise the feasibility of this SWT project in terms of the capital and ongoing costs, and the environmental benefits. The CBA will consider the value of the designed SWT in comparison to diesel-generated power.

4.3.1 Quantitative Costs and Benefits

Quantitative costs and benefits are those characteristics of the project that can be quantified in monetary terms. The project costs involve the capital cost of the equipment which also includes the transport, assembly and installation costs. Costs are also ongoing, such as the cost of replacement parts or labour during the annual maintenance program. As described in Section 4.3.3 the Australian Government provides incentives that enable the quantitative costs to be reduced and the benefits increased.

The project benefits are more difficult to quantify. In the case of a SWT, which is a renewable energy generation unit, the monetary value of the benefits can be quantified by calculating the cost of the diesel generator supplied electricity that would have otherwise been consumed.

The net capital cost of the designed SWT system is provided in Table 3.5. Considering the installation of a one-off machine, the total cost is 21,178 AUD. The ongoing costs associated with servicing were approximated at 100 AUD per year.

According to Brent (2006) the capital cost of a project can be calculated as an annuity, which is an equivalent annual flow of costs, by the following equation:

$$E = \frac{C_0}{AF}$$

Where,

E = equivalent annual cost (AUD)

C_0 = initial capital sum (AUD)

AF = annuity factor

The annuity factor is given by (Brent 2006),

$$AF = \sum_{t=0}^{t=T} \frac{1}{\left(1+i\right)^{t}}$$

Where,

i = discount rate (%)

T = total length of term (years)

t = year, $0 < t < T$

By using an equivalent annual cost the net present value (NPV) method of evaluation can be used for the CBA. NPV is a method used to convert future costs and benefits into values that may be directly compared with present values. It is based on the fact that a dollar in present terms is worth more than a dollar in future terms. It may be considered the inverse of compounding, and the calculations used to determine NPV reflect this observation. Brent (2006) expresses the NPV of a project in terms of its costs and benefits as:

$$NPV = \sum_{t=0}^{t=T} \frac{B_t - C_t}{\left(1+i\right)^{t}}$$

Where,

B_t = benefits in year t, expressed as a present value

C_t = costs in year t, expressed as a present value

The feasibility of the SWT project may then be appraised as follows,

$NPV > 0$, the project is economically feasible

$NPV < 0$, the project is deemed economically unfeasible

The economic feasibility of a project thus depends upon the quantitative benefits and costs of the project, as well as the discount rate.

The discount rate is used to convert costs and benefits that occur in future time periods to a present value so that they can be directly compared. It is based on the principal that, in general, society prefers to immediately receive goods and services, while deferring costs to future generations, a process that is called social time preference. Thus the social discount rate, as it is more precisely known, is not simply an economic factor but also considers social values. Selection of a social discount rate has implications on the outcomes of the CBA.

The Office of Best Practice Regulation (OBPR) in its Best Practice Regulation Handbook suggests use of an annual real discount rate of seven per cent (Australian Government 2007). The handbook also recommends that for sensitivity analysis, as discussed in Section 4.3.4, net present values should be calculated with the real discount rates of 3, 7 and 11 per cent.

4.3.2 Qualitative Costs and Benefits

There are costs and benefits associated with any project that are not able to be quantified in financial terms. These qualitative costs and benefits include such things as environmental enhancement or destruction, visual amenity or pollution, and noise pollution. The issues discussed in Section 2.4.5 may constitute some of the qualitative costs of a SWT project, however, it has already been established that the project advocates sustainability and GHG reduction, both as a direct action, and as an example for others, thereby magnifying the qualitative benefits.

4.3.3 Financial Assistance

Financial assistance may be available through two initiatives of the Australian Government. Through the Renewable Remote Power Generation Program (RRPGP) an owner can benefit from financial assistance with the capital outlay of the project, thereby reducing quantitative costs. The trading of Renewable Energy Certificates (RECs) presents a means by which an owner can make an income from the production of energy by a renewable energy source, and as such, contribute to the quantitative benefits.

The Australian Government is able to offer a rebate, as a climate change initiative, of up to 50 percent of the capital cost of a project to install an energy generation system that takes advantage of sustainable technologies, including wind power, under the RRPGP scheme as described in Section 2.3.4. Certain conditions need to be met before the funding can be made available (DEWHA 2008):

- The small generation unit (SGU) must be located in an off-grid area

- The SGU must consist of new equipment
- Design and installation of the SGU must be conducted by suitably qualified people, such as accredited installers
- The system must have a minimum rated capacity of 450 W
- 30 percent of the total cost must be spent on the SGU
- Approval must be obtained prior to installing the SGU system

A Renewable Energy Certificates (REC) is another device through which a SWT owner can offset the capital cost of the SGU. A REC has a value equal to 1 MWh of electricity generated from a sustainable source (ORER 2008a). Owners of domestic SGUs can benefit financially from RECs under the MRET, so long as the SWT has a rated power output of 10 kW or less, or an annual energy yield of no more than 25 MWh.

The number of RECs that an owner can claim in a single year can be calculated according to information provided by ORER (2008b). For the designed SWT, with a rated output of 1 kW, and for 3650 effective operating hours in a year, the number of RECs that may be claimed annually is calculated in accordance with ORER (2008b) to be 3.47 RECs. According to Rossiter and Singh (2005) the spot value of a REC is currently somewhere around 30 AUD. However, RECs are traded on a free market, and as such, their prices are uncontrolled and may vary from this figure significantly. The total annual incentive provided to the SGU owner is thus in the order of approximately 100 AUD.

4.3.4 Sensitivity

Sensitivity analysis is used to determine the potential effects of the deviation of any variables from their estimated value. Since a CBA makes estimates and assumptions for factors such as discounting rates, servicing costs and the availability of government financial assistance, the analysis is subject to uncertainty (Campbell & Brown 2003).

The method required to effectively analyse the project sensitivity is to identify those variables that have a high degree of uncertainty, to define a suitable range of values for the variables, and to examine the effects of adjusting the variables through the specified range. The variables that create a large deviation in the outcome of the CBA will be highlighted, and can be identified as a risk to the financial sensitivity of the project (Campbell & Brown 2003).

The variables that have been identified as having a high degree of uncertainty for this project are:

- The social discount rate
- The availability of government funding through the RRPGP scheme
- The market price of RECs
- Annual servicing and maintenance costs
- The rate of increase of the cost of diesel

In Section 4.3.1 the range of social discount rates to be used in the sensitivity analysis was given as 3, 7 and 11 per cent, based on the recommendations of OBPR (Australian Government 2007).

The government funding available through the RRPGP initiative was quoted as a maximum of 50 percent in Section 4.3.3, so the sensitivity analysis will consider the possibility that only half of the maximum funding is made available, that is 25 percent, or in the case that the application for funding is denied, a nil percentage will be applied.

The market price of RECs was discussed in Section 4.3.3, where a spot price of 30 AUD was found to be an approximate average. It is expected that sell prices of RECs will rise as large businesses compete within the market. However, like any other tradable commodity, prices can fall as quickly as they rise, hence, the range of values assumed for the sensitivity analysis will be 20 AUD to 50 AUD.

The annual cost of servicing the SWT system was estimated in Section 3.6.7 as 100 AUD. Since the first SWT installed would effectively be a prototype, the system faults are as yet unknown, and as with all prototypes the likelihood of faults occurring is higher than for a tested and proven device. In consideration of this the range of values to be used for the annual servicing cost will be 100, 200 and 500 AUD.

The rate at which the cost of diesel will rise in the future is uncertain. According to Ireson (2008) the retail cost of diesel has risen by 20 percent in the past twelve months, but it is uncertain whether this rate of increase will continue to be sustained, or if it will increase or decline. A price rise of 20 percent per annum for any product on a free market is normally considered very high, so the range to be used in the sensitivity analysis will be as low as 5 percent, and at a mid-range value of 12.5 percent, to allow for the inherent uncertainty. The current cost of diesel generated power is approximately 0.43 AUD/kWh (Passey, Watt, Outhred et al 2007), so the present value for the quantitative benefit of offsetting diesel-generated power is 0.43 AUD/kWh multiplied by the annual yield given in Section 3.6.8 of 1475 kWh. Thus the base value is taken as 634 AUD, increasing at a rate of 20 percent per annum.

The base scenario considered for the CBA sensitivity analysis is a discount rate of 7 percent, with 50 percent funding from the Australian government through the RRPGP scheme, 30 AUD REC sell price, with 100 AUD annual servicing cost and an annual diesel price increase of 12.5 percent. The best case scenario modifies all variables to maximise the benefits while minimising project costs. Conversely, the worst case scenario reduces benefits to a minimum while maximising project costs. The complete set of alternative scenarios are summarised by the following matrix:

Scenario	**Discount Rate %**	**RRPGP Contribution %**	**REC price AUD**	**Annual Service Cost AUD**	**Rate of increase of cost of diesel %**
Base	**7**	**50**	**30**	**100**	**12.5**
Best Case	3	50	50	100	20
Worst Case	11	0	20	500	5
2	**3**	50	30	100	12.5
3	**11**	50	30	100	12.5
4	7	**25**	30	100	12.5
5	7	**0**	30	100	12.5
6	7	50	**20**	100	12.5
7	7	50	**50**	100	12.5
8	7	50	30	**200**	12.5
9	7	50	30	**500**	12.5
10	7	50	30	100	**5**
11	7	50	30	100	**20**

Table 4.1 – CBA Sensitivity Analysis Scenario Matrix (author’s original data 2008)

4.3.5 Outcomes

Figure 4.1 shows the best and worst case scenarios plotted against the base scenario. It is immediately apparent that since the NPV is greater than zero for the base scenario, the project may be deemed financially feasibly, given the basic variables as discussed in Section 4.3.4. The best and worst case curves show the range of variability in the final NPV that can be expected from any of the subsequent scenarios.

Figure 4.2 shows the effect of varying the social discount rate. It is interesting to note that while a reduction of the discount rate to 3 percent has a large positive influence on the NPV, a discount rate of 11 percent does not affect the feasibility of the project since the NPV remains marginally positive.

The effect of reducing the Australian government's contribution to the capital sum of the project from 50 percent to 25 and 0 percent is displayed in Figure 4.3. It is clear that the government incentive is a critical factor of the financial success of the project, since nil funding resulted in a negative NPV, thereby denying financial feasibility. With 25 percent funding the project remained marginally feasible, so it is immediately apparent that prior to the installation of any off-grid SWT project the application for funding through the RRPGP should be submitted.

Figures 4.4 and 4.5 show that Scenarios 6 and 7, the variable market value of RECs, and Scenarios 8 and 9, the increased annual service cost, create only a small deviation in the resultant NPV. Both factors can now be considered non-critical.

Observation of Figure 4.6 finds that the annual rate of increase of the cost of diesel is a critical factor of the sensitivity analysis. While it is apparent that dwindling supplies of fossil fuels will generally serve to increase demand and increase fuel prices, the extent of the increase over the next 20 years is highly unpredictable. Fuel is a commodity that's price stability is affected not only by market forces of supply and demand, but increasingly, by intergovernmental relations and foreign trade agreements. So the information that can be taken from Figure 4.6 is highly interesting, since a 5 percent annual increase in the price of diesel will make the SWT project financially unfeasible. On the other hand, however, an escalation in the cost of diesel would see the SWT becoming increasingly economical.

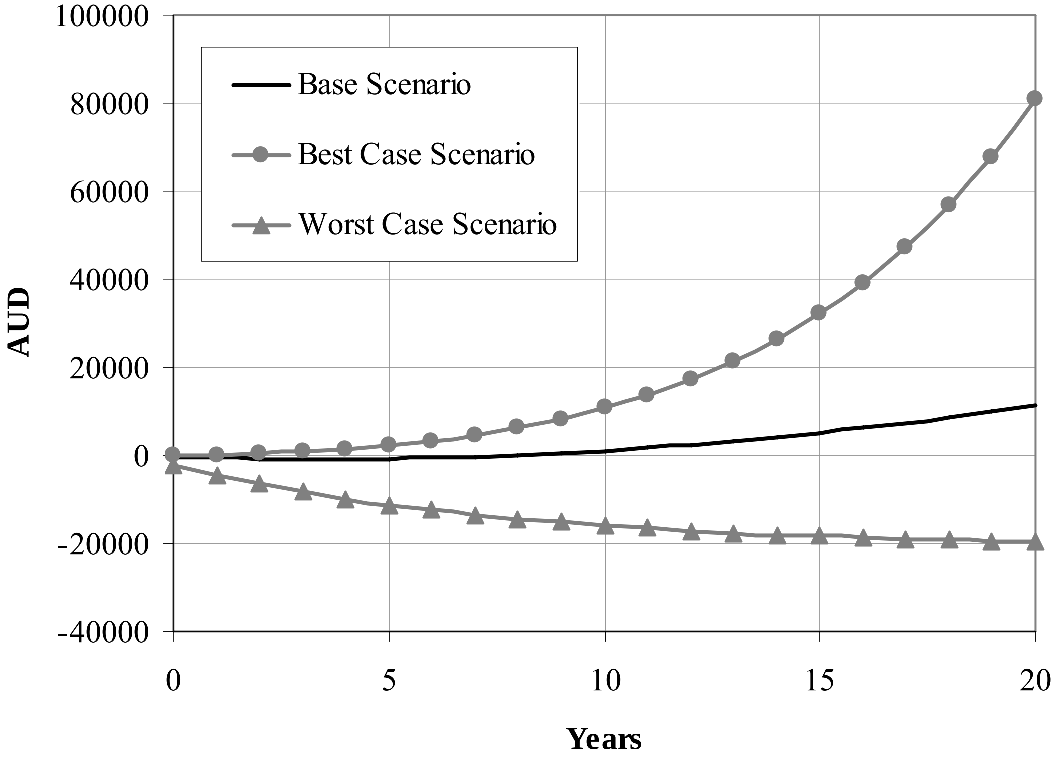

Figure 4.1 – CBA Sensitivity Analysis - Best and Worst Case Scenarios (author's original data 2008)

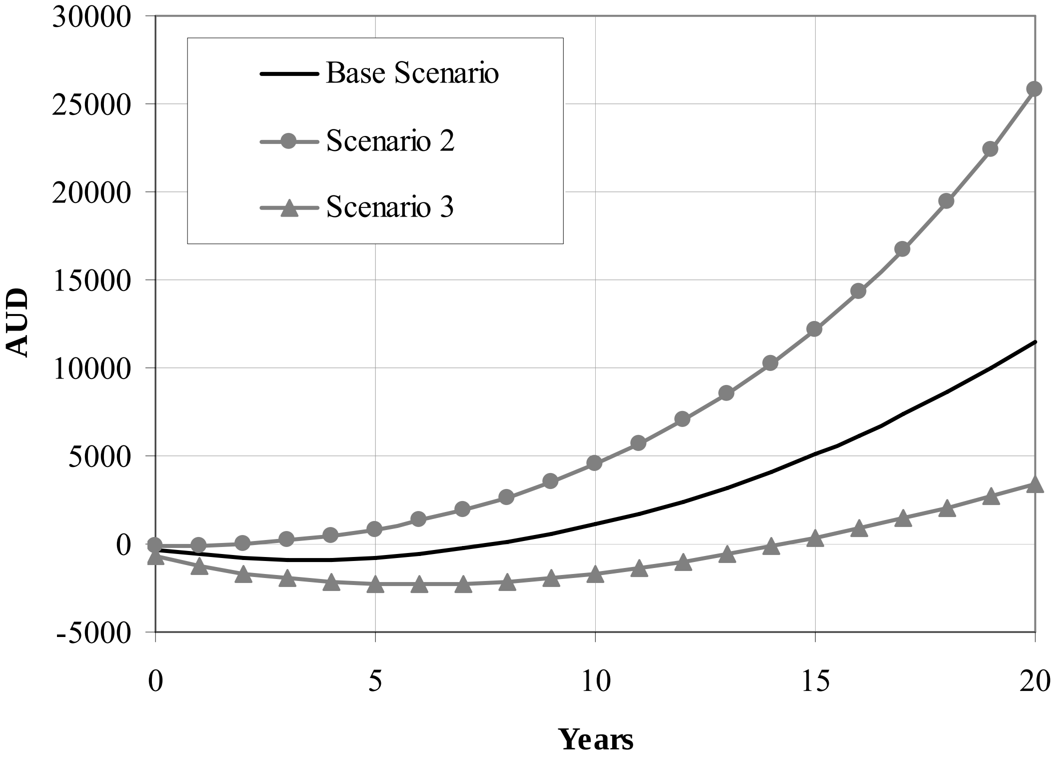

Figure 4.2 – CBA Sensitivity Analysis - Scenarios 2 & 3 (author's original data 2008)

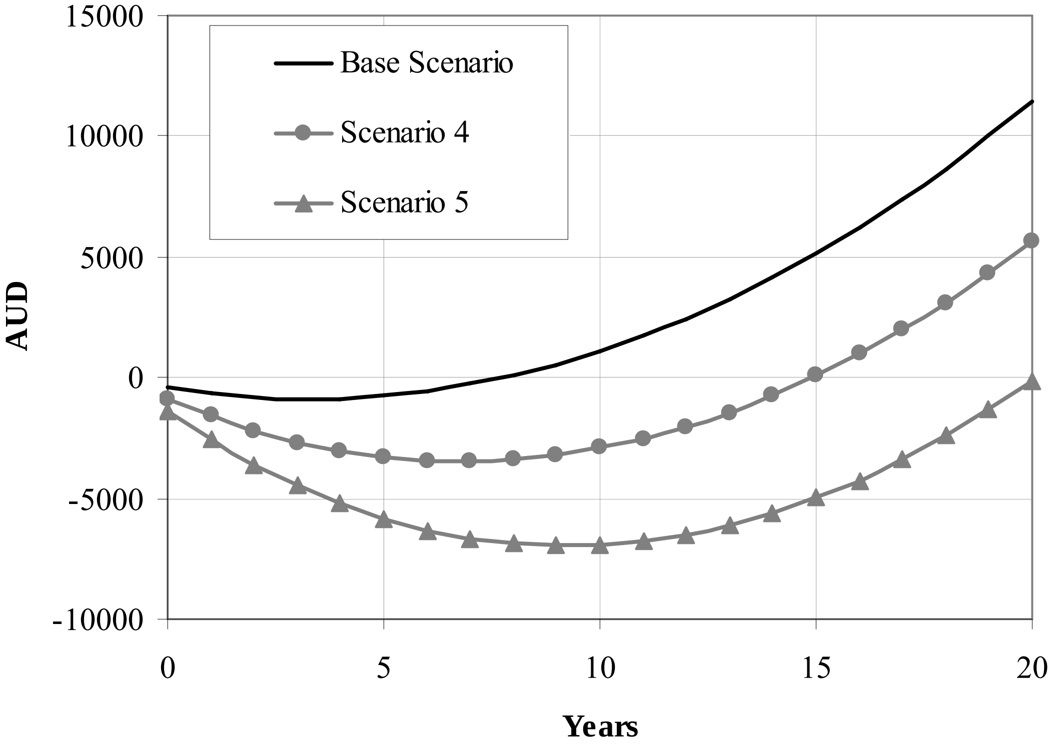

Figure 4.3 – CBA Sensitivity Analysis – Scenarios 4 & 5 (author's original data 2008)

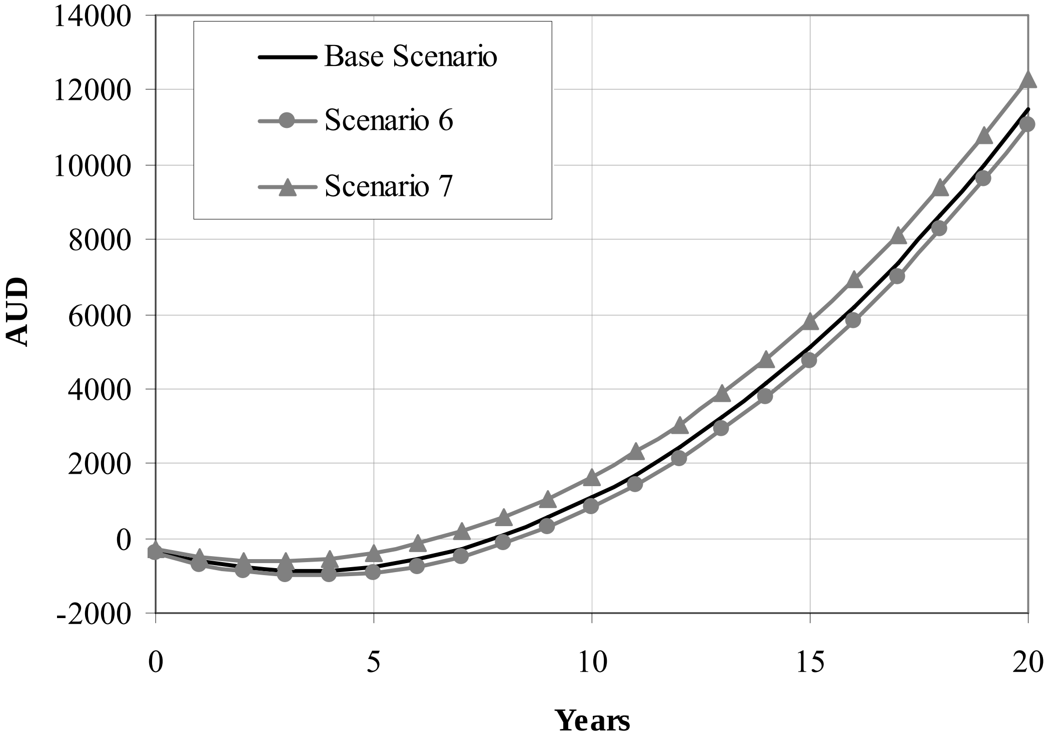

Figure 4.4 – CBA Sensitivity Analysis – Scenarios 6 & 7 (author's original data 2008)

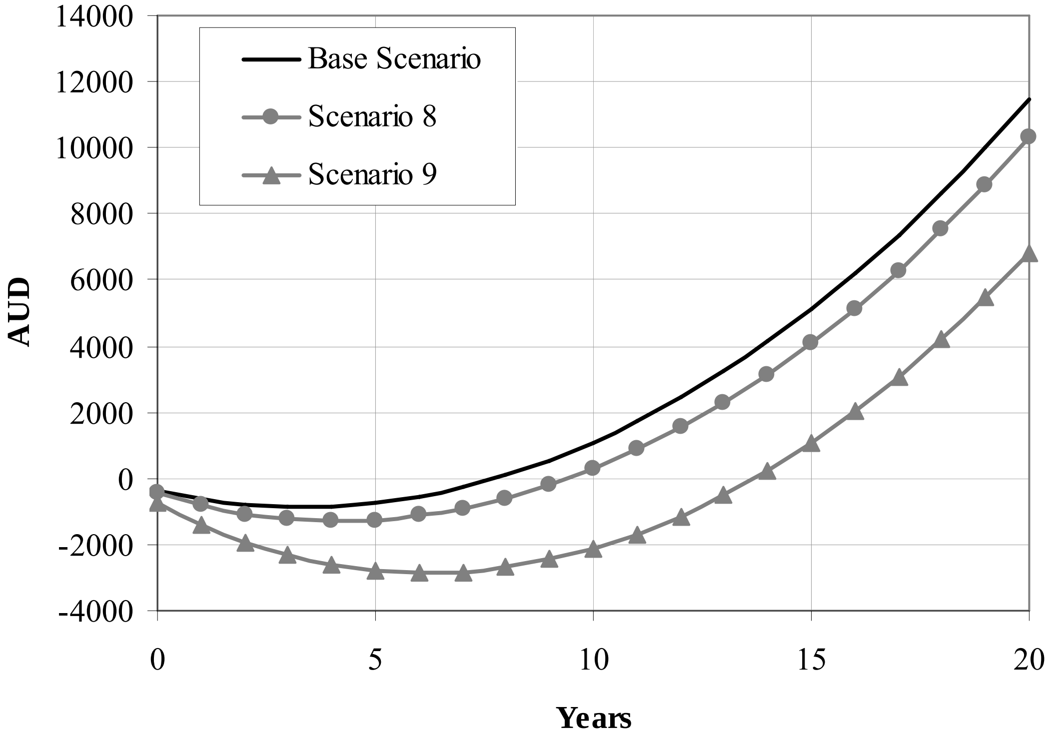

Figure 4.5 – CBA Sensitivity Analysis – Scenarios 8 & 9 (author's original data 2008)

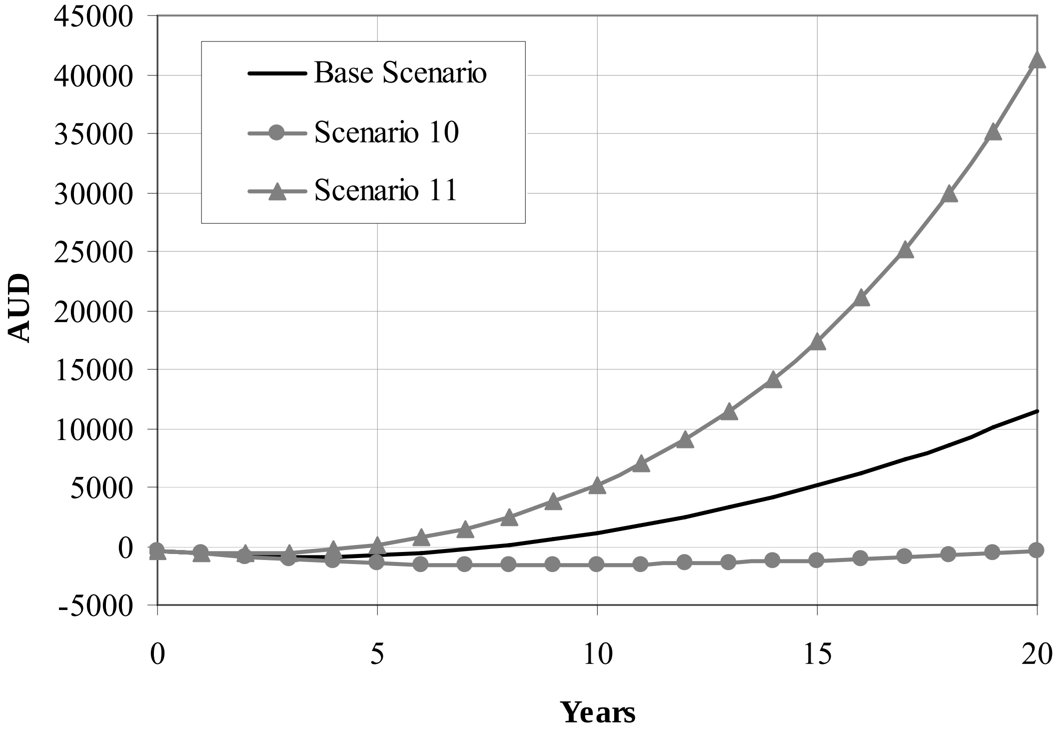

Figure 4.6– CBA Sensitivity Analysis – Scenarios 10 & 11 (author's original data 2008)

4.4 Summary

This chapter has highlighted the aspects of the SWT design that were considered highly successful, while also drawing attention to the less successful aspects of the design. Some of the major design successes have been the unique furling mechanism, the identification of target areas for SWTs in Queensland's off-grid regions, and the general development of an original concept into an integrated design with 3D parametric models, manufacturing drawings and a machine specification.

A cost-benefit analysis was conducted which successfully resulted in positive economic feasibility for the base scenario considered. A sensitivity analysis explored the response of the project to fluctuations in key variables, such as the social discount rate, and the rate of increase of the cost of diesel. The price of RECs and the maintenance costs were found to be non-critical, but discount rate, RRPGP funding and diesel price rise were observed to have significant influence on the outcome of the CBA.

Chapter 5 Conclusions

5.1 Introduction

The purpose of this research project was to design a small wind turbine that could be used in regional Queensland. The main objectives of the research were to develop an understanding of SWTs, and to then apply this knowledge to create an original design. Following this, an critical evaluation of the design was required to make improvements on the original concept, and to assess the economic feasibility.

This chapter will discuss the results of the project with respect to the research objectives. The value of the results will also be reviewed to identify areas where further research may provide more insightful or useful outcomes.

5.2 Discussion

The clear outcome of this research project is that a small wind turbine is an economically and technically feasible renewable energy generator that has the potential to replace non-renewable energy supplies in regional and off-grid areas of Queensland.

The definitive aim of this research project was to satisfy the research objectives as set out in Section 1.3, and it is believed that this has been achieved.

Through conducting the literature review, insight was gained into the many aspects of wind energy. This included the history of wind as an energy source and the current technologies employed to harness the available power, the social issues and environmental impacts, and the position of small wind turbines in the financial market. The literature reviews usefulness was evident in the development of a basis for the project methodology and conceptual design formulation.

A conceptual design was created on the basis of information examined in the literature review. SWTs are a new technology based on well-established designs for much larger machines, so while much of the design drew from centuries of knowledge and experience, certain aspects of the conceptual design required fresh and innovative solutions. Innovation and creativity were delivered, and the conceptual ideas were progressed to a more thorough design.

A conventional engineering methodology was engaged to develop the conceptual ideas into a simple, functional and efficient design. A broad range of components formed the system, so extensive work was undertaken to integrate original designs with commercially available components. Consideration was also given to the manufacture, transport, assembly, installation, maintenance, operation, and decommissioning of the SWT system.

After developing the SWT design to the point of manufacturing drawings, a process of critical evaluation was used to appraise the success of the design. This evaluation took into account the positive elements of the design, while also acknowledging the areas of the design that could benefit from improvement or further research.

A system specification was created, based upon the developed designs and the performance calculations. The specification enabled comparison of the design with competing products, as set out in Appendix B.1. It was found that the performance of the designed SWT matched or exceeded other products.

A sensitivity analysis was undertaken as a part of the Cost-Benefit Analysis, resulting in a prediction of the financial feasibility of the developed design. Despite the fact that this project has been engineered with limited resources and time, it is anticipated that the SWT project would provide a feasible means of generating electrical power, and effectively offset the use of power from a non-renewable resource.

Through successful completion of the research objectives the following outcomes were also achieved:

a) A technical specification of the final design
b) Predicted system outputs, including power curves over the wind speed range, and estimated power production capacities based on a range of annual average wind speeds
c) A parametric 3D-modelled design integrated into a complete assembly, along with a set of manufacturing drawings
d) A unique and viable alternative to conventional energy sources, with allowance for manufacture, installation, maintenance and decommissioning
e) A proposed installation site that will benefit from the use of wind power, and act as a model to other communities and individuals of the ability to take responsibility for personal energy use

f) A total system cost, comparisons with similar products, and a Cost-Benefit Analysis to assess the feasibility of the design

5.3 Further Research and Recommendations

While every effort was made to complete a thorough design of the SWT, many opportunities exist to expand on the work undertaken. As a result of the large scope of the SWT project, a variety of elements could be enhanced, including technical design of mechanical and electrical components, investigation of social or environmental issues, and micro-siting.

During the course of the project work, it became apparent that specific mechanical components could greatly benefit from further investigation. Design of the rotor blades was considered too complicated and arduous, and thus, beyond the time limitations of this project. However, the rotor blades form a critical part of the SWT design, so a custom blade design would be a highly valuable part of the overall system. The wider value of such research may also be considered highly opportune, given the increasing urgency for the development of renewable energy technologies. It is recommended then, that GFRP rotor blade designs be given consideration for future research projects.

As discussed in Section 4.2.3, many load cases were not considered for the turbine body, or for the GFRP tower. To improve the integrity of these components it is recommended that future research efforts could focus more narrowly on these items. Optimisation of the entire design would also be advantageous, and a meaningful course of study.

The electrical and control systems of the SWT are another area of further work that is suggested. Design of a controller that regulates the delivery of power to the batteries is a worthwhile task. Conceivably, the controller could also provide a means of integrating the SWT with domestic mains power, so that a battery system can be eliminated.

Through conducting the literature review, it became clear that very little information exists in relation to the social and environmental impacts of SWTs, or the community response to such an installation. Greater understanding of the impacts of a SWT would allow future technical efforts to focus on minimising those aspects that may affect the social acceptance of SWT technology.

Investigation of SWT micro-siting would enable users to maximise the power that they can extract from the wind resources at their site. As discussed in Section 3.4, topographical characteristics of a landscape can be used to an advantage, so further research in this area may be beneficial.

5.4 Summary

This chapter examined the outcomes of the research project, and looked at future work that could be undertaken. A solution was developed from an original conceptual idea, and the outcome of this design is comparable with similar products that are currently available. All of the original research objectives were achieved.

The work has clearly identified the potential of SWTs to replace non-renwable forms of energy in regional Queensland.

SWTs are a viable part of a sustainable energy solution for Australia and further research and development will help to improve market share by increasing efficiency and reducing cost, relieve public concerns and minimise external impacts.

Appendix A

A.1 – Project Specification

University of Southern Queensland

FACULTY OF ENGINEERING AND SURVEYING

ENG4111/4112 Research Project
PROJECT SPECIFICATION

FOR: **Simon James STRONG**

TOPIC: DESIGN OF A SMALL WIND TURBINE

SUPERVISOR: Dr. Jayantha Epaarachchi, USQ

ENROLMENT: ENG4111 – S1, External, 2008
ENG4112 – S2, External, 2008

PROJECT AIM: This project seeks to investigate, plan and implement a small wind turbine design for use in regional Queensland. A Cost Benefit Analysis will also be undertaken to assess the feasibility of the design.

SPONSORSHIP: None

PROGRAMME: (Issue A, 21 March 2008)

1. Research background information relating to small wind turbines.
2. Investigate potential wind energy sites in regional Queensland and select a target location to implement the project.
3. Investigate the system components and functions for a small wind turbine, and identify the latest technologies and their limitations.
4. Develop a suitable design based on the target location and the current leading technologies.
5. Perform a Cost Benefit Analysis to assess the feasibility of the design.
6. Plan the design implementation and develop a working 3D design, and theoretical outputs.
7. Investigate the implementation of the design, including installation, operation, maintenance, serviceability and decommissioning.

AGREEMENT:

Signed: ________________ (Student) ________________ , ________________ (Supervisors)

Date: / /2008 / /2008 / /2008

Examiner/Co-examiner: ____

Appendix B

B.1 – Table of Small Wind Turbines – a comparison

B.2 – Roughness Length Table

B.3 – Target Location - site information and wind roses

B.4 – Ginlong PMG Data

B.5 – Manufacturing drawings for designed components

B.6 – Properties of GFRP Orthotropic Elasticity

B.1 Table of Small Wind Turbines – a comparison

Manufacturer	**ACSA**	**Aeolia**	**Bergey**
Model	ACSA LMW-1500	H7	XL.1
Origin	Spain	Canada	USA
Power			
Rated Power (W)	1000	900	1000
Max. Power (W)	1400	1500	1300
Wind Speed			
Rated Wind Speed (m/s)	10.5		11
Starting Wind Speed (m/s)		1.64	3
Cut-in Wind Speed (m/s)	2.5		2.5
Cut-out Wind Speed (m/s)			None
Survival (m/s)	60		54
Furling Wind Speed (m/s)			13
Rotor Speed			
Rated Rotor Speed (rpm)	470		490
Max. Rotor Speed (rpm)	800		
Tip Speed (m/s)	76.8		64.1
Rotor			
No. blades	3	7	3
Diameter (m)	3.12	1.55	2.5
Rotor Surface Area (m^2)	7.65	1.89	4.91
Blade material	GFRP or CFRP	CFRP	Pultruded Fibreglass
Airfoil	NACA 4415		Patented design
Generator			
Type	PMA	PMA	Neodymium PMA
No. poles	12		
Rated voltage (V)	12 / 24 / 120 VAC	12 / 24 / 48	24 VDC
Frequency (Hz)	0-80		
No. of phases	3		
Power Control	Inclined hinged tail		Autofurl
Slip Rings		No	
Orientation System	Passive by tail	Passive by tail	Passive by tail
Brake System	Integral		Electric
Controller	Supplied		Supplied
Tower			
Type	Guyed	None	Tilt-Up
Height (m)	6 - 18	-	9 - 32
Annual Yield (kWh/yr)			
Avg. wind speed 4 m/s	1070		1010
Avg. wind speed 4.5 m/s			1410
Avg. wind speed 5 m/s	1845		1850
Avg. wind speed 5.5 m/s			2320
Avg. wind speed 6 m/s	2725		2790
Avg. wind speed 7 m/s	3660		
Avg. wind speed 8 m/s	4575		

Table B.1.1 – SWT comparison table (author's compiled information 2008)

Manufacturer	Exmork	Hornet	Samrey
Model	HM2.8-1KW	HT2M	Merlin
Origin	China	USA	UK
Power			
Rated Power (W)	1000	1000	1100
Max. Power (W)	1500	1300	2500
Wind Speed			
Rated Wind Speed (m/s)	8	26.8	8
Starting Wind Speed (m/s)	2.5		
Cut-in Wind Speed (m/s)	3		3
Cut-out Wind Speed (m/s)	25		
Survival (m/s)	50		
Furling Wind Speed (m/s)			Variable
Rotor Speed			
Rated Rotor Speed (rpm)	400		200
Max. Rotor Speed (rpm)			
Tip Speed (m/s)	58.6		36.7
Rotor			
No. blades	3	6	3
Diameter (m)	2.8	1.50	3.5
Rotor Surface Area (m^2)	6.16	1.76	9.62
Blade material	GFRP	CFRP	
Airfoil			
Generator			
Type	PMA	Brushless PMA	Neodymium PMA
No. poles			
Rated voltage (V)	24/48 VDC	24V	240 VAC
Frequency (Hz)			
No. of phases	3		3
Power Control	Furling		Furling
Slip Rings		No	
Orientation System	Passive by tail	Passive by tail	Passive by tail
Brake System	Auto		Park brake
Controller	Included		Included
Tower			
Type	Guyed	None	Guyed or freestanding
Height (m)	Jan-00	-	10
Annual Yield (kWh/yr)			
Avg. wind speed 4 m/s			1800
Avg. wind speed 4.5 m/s			2500
Avg. wind speed 5 m/s			3100
Avg. wind speed 5.5 m/s			4000
Avg. wind speed 6 m/s			4700
Avg. wind speed 7 m/s			6200
Avg. wind speed 8 m/s			7300

Table B.1.2 – SWT comparison table (author's compiled information 2008)

Manufacturer	**Southwest Windpower**	**Vaigunth**	**windturbines.ie**
Model	Whisper 200	AR-1000W	FD2.7-1000-10
Origin	USA	India	Ireland
Power			
Rated Power (W)	1000	1000	1000
Max. Power (W)			1300
Wind Speed			
Rated Wind Speed (m/s)	11.6	8.2	9
Starting Wind Speed (m/s)	3.1		
Cut-in Wind Speed (m/s)		3.5	3
Cut-out Wind Speed (m/s)		23	
Survival (m/s)	55	60	
Furling Wind Speed (m/s)	13.5		12
Rotor Speed			
Rated Rotor Speed (rpm)		250	
Max. Rotor Speed (rpm)			
Tip Speed (m/s)		52.4	
Rotor			
No. blades	3	3	3
Diameter (m)	2.7	4	2.7
Rotor Surface Area (m^2)	5.73	12.57	5.73
Blade material	CFRP	GFRP	
Airfoil		NACA 23015	
Generator			
Type	PMA	AC Generator	PMA
No. poles			
Rated voltage (V)	24/36/48VDC	240	48 VDC
Frequency (Hz)		50	
No. of phases		Single	
Power Control	Auto side furling		Autofurl
Slip Rings			
Orientation System	Passive by tail	Passive by tail	Passive by tail
Brake System		Electromagnetic Brake	
Controller	"Whisper controller"	PLC	Included
Tower			
Type	None	Guyed	Guyed
Height (m)	-	10 or 12	6
Annual Yield (kWh/yr)			
Avg. wind speed 4 m/s	1200		
Avg. wind speed 4.5 m/s	1680	4500	
Avg. wind speed 5 m/s	1980		
Avg. wind speed 5.5 m/s	2400		
Avg. wind speed 6 m/s	2880		
Avg. wind speed 7 m/s	3840		
Avg. wind speed 8 m/s	4500		

Table B.1.3 – SWT comparison table (author's compiled information 2008)

B.2 Roughness Length Table

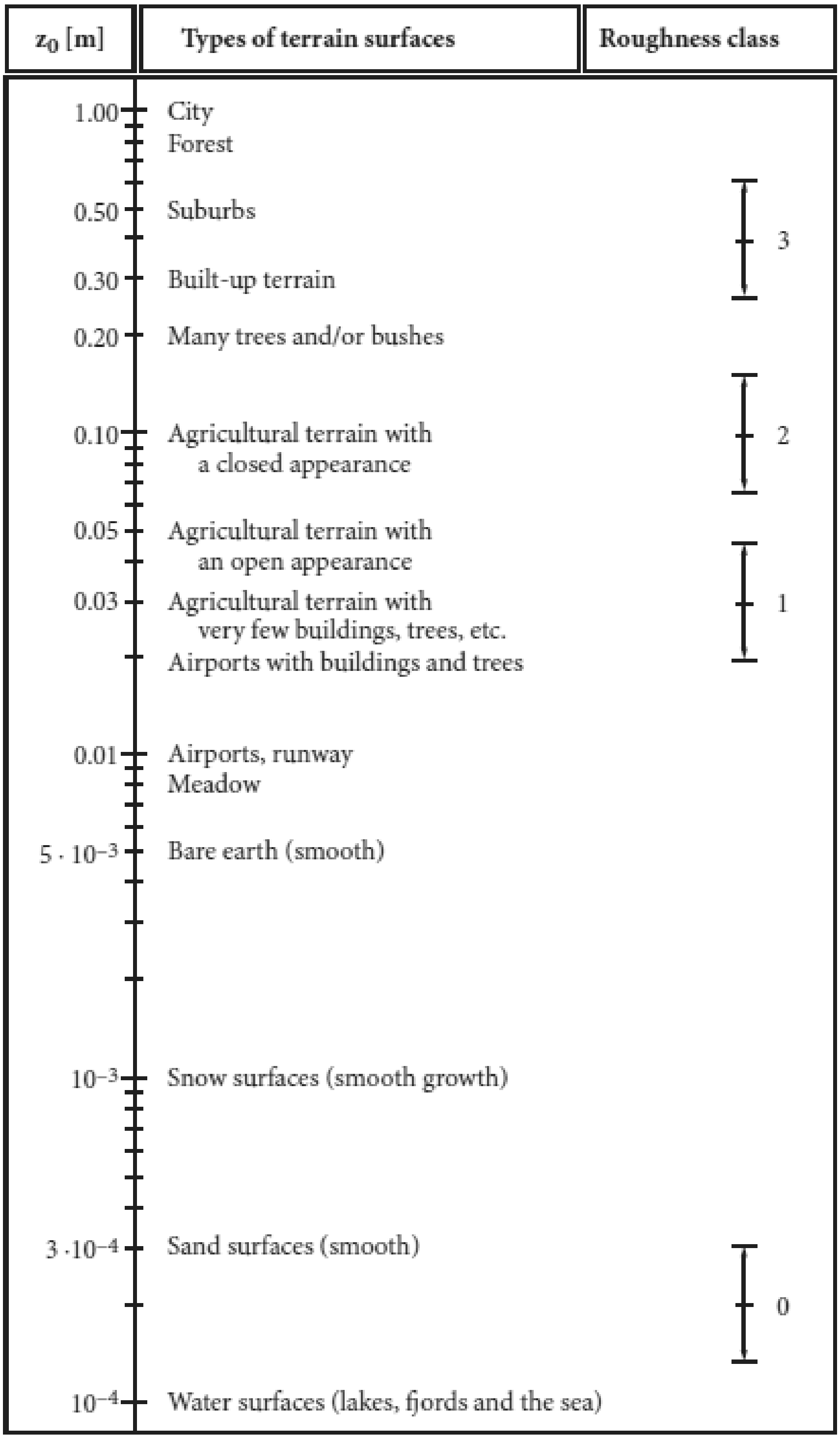

z_0 [m]	Types of terrain surfaces	Roughness class
1.00	City Forest	
0.50	Suburbs	
		3
0.30	Built-up terrain	
0.20	Many trees and/or bushes	
0.10	Agricultural terrain with a closed appearance	2
0.05	Agricultural terrain with an open appearance	
0.03	Agricultural terrain with very few buildings, trees, etc. Airports with buildings and trees	1
0.01	Airports, runway Meadow	
$5 \cdot 10^{-3}$	Bare earth (smooth)	
10^{-3}	Snow surfaces (smooth growth)	
$3 \cdot 10^{-4}$	Sand surfaces (smooth)	
		0
10^{-4}	Water surfaces (lakes, fjords and the sea)	

Figure B.2.1 – Roughness lengths and classes for various surface characteristics (Hau 2006)

B.3 Target Location - site information and wind roses

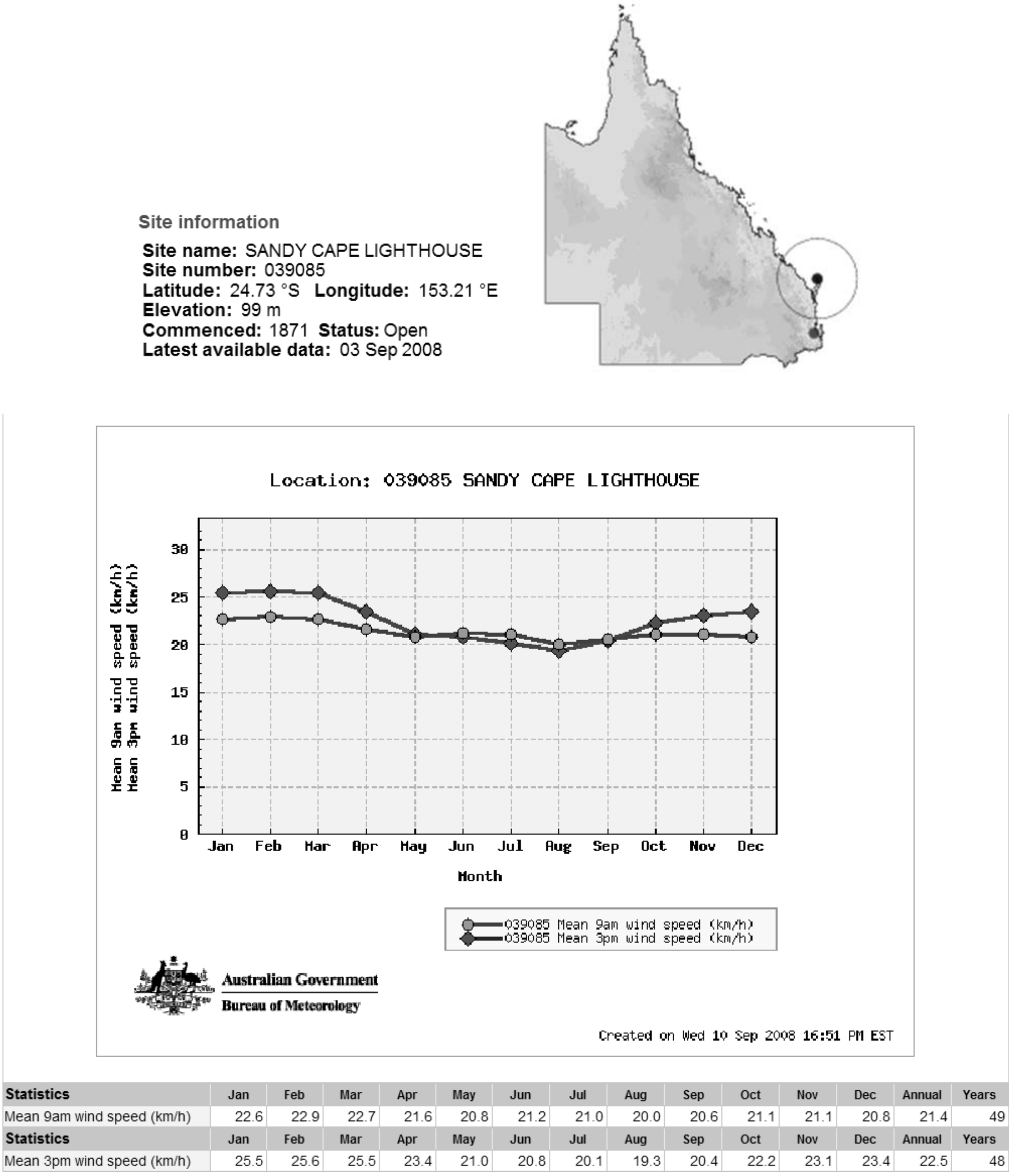

Site information

Site name: SANDY CAPE LIGHTHOUSE
Site number: 039085
Latitude: 24.73 °S **Longitude:** 153.21 °E
Elevation: 99 m
Commenced: 1871 **Status:** Open
Latest available data: 03 Sep 2008

Statistics	Jan	Feb	Mar	Apr	May	Jun	Jul	Aug	Sep	Oct	Nov	Dec	Annual	Years
Mean 9am wind speed (km/h)	22.6	22.9	22.7	21.6	20.8	21.2	21.0	20.0	20.6	21.1	21.1	20.8	21.4	49
Statistics	**Jan**	**Feb**	**Mar**	**Apr**	**May**	**Jun**	**Jul**	**Aug**	**Sep**	**Oct**	**Nov**	**Dec**	**Annual**	**Years**
Mean 3pm wind speed (km/h)	25.5	25.6	25.5	23.4	21.0	20.8	20.1	19.3	20.4	22.2	23.1	23.4	22.5	48

Figure B.3.1 – Sandy Cape Lighthouse site data (BOM 2008)

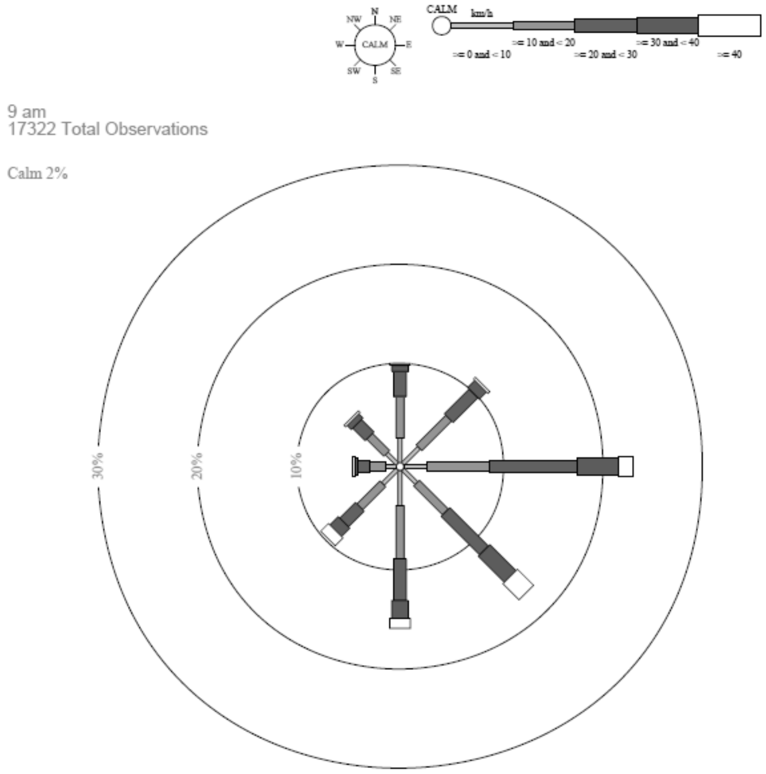

Figure B.3.2 – Sandy Cape Lighthouse 9am wind rose (BOM 2008)

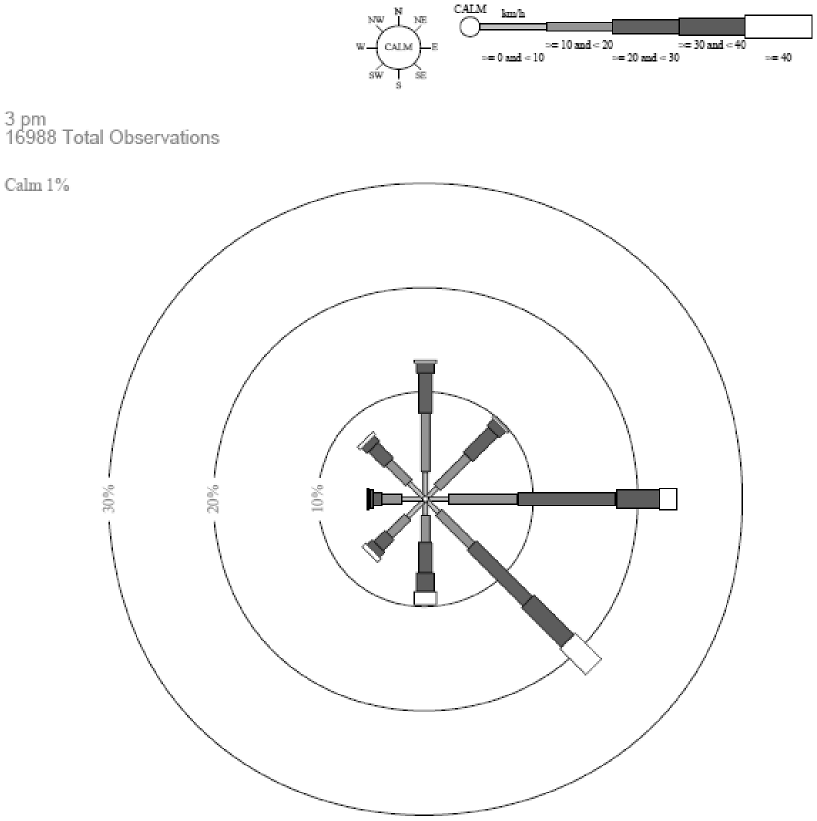

Figure B.3.3 – Sandy Cape Lighthouse 3pm wind rose (BOM 2008)

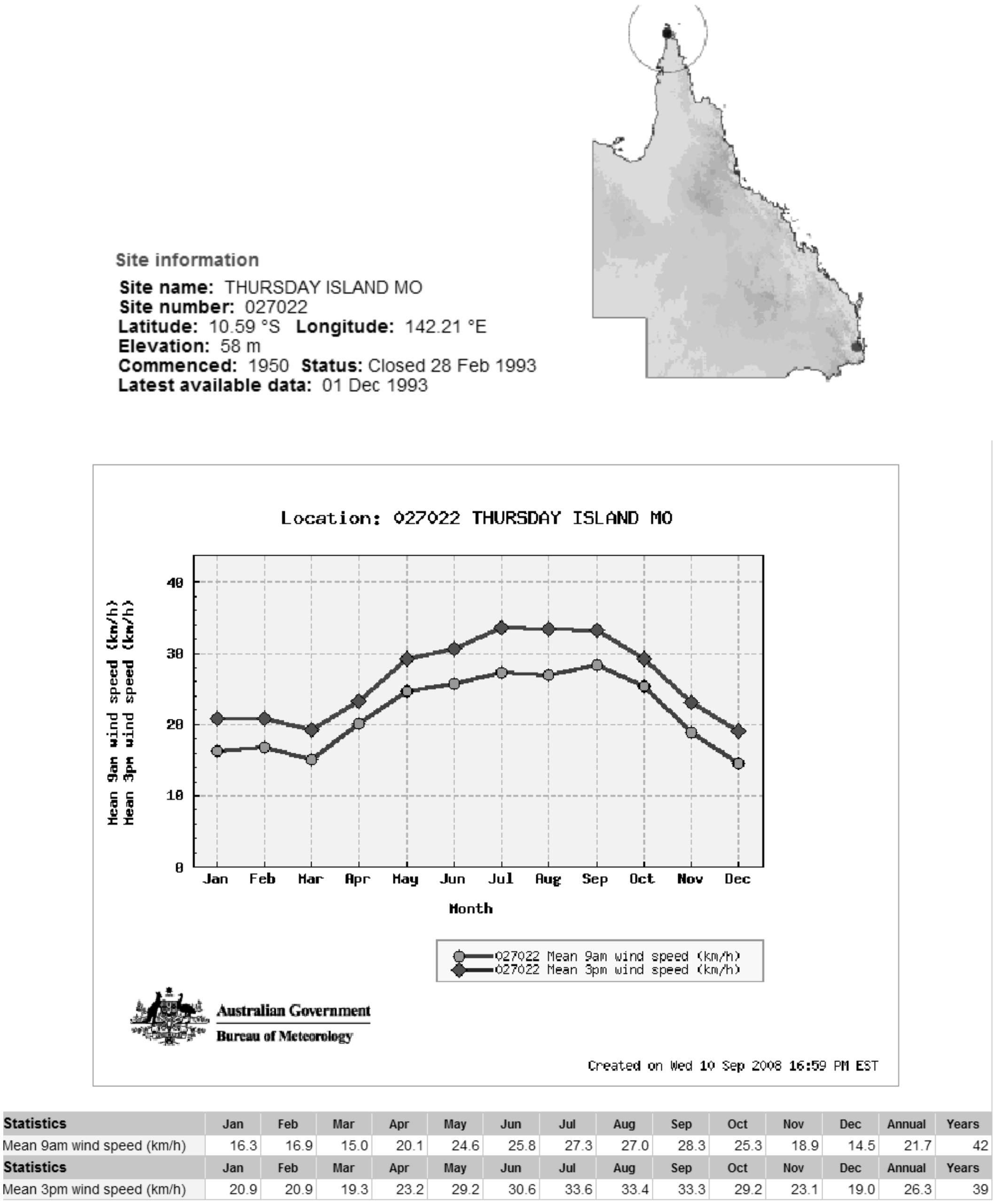

Site information

Site name: THURSDAY ISLAND MO
Site number: 027022
Latitude: 10.59 °S **Longitude:** 142.21 °E
Elevation: 58 m
Commenced: 1950 **Status:** Closed 28 Feb 1993
Latest available data: 01 Dec 1993

Statistics	Jan	Feb	Mar	Apr	May	Jun	Jul	Aug	Sep	Oct	Nov	Dec	Annual	Years
Mean 9am wind speed (km/h)	16.3	16.9	15.0	20.1	24.6	25.8	27.3	27.0	28.3	25.3	18.9	14.5	21.7	42
Statistics	**Jan**	**Feb**	**Mar**	**Apr**	**May**	**Jun**	**Jul**	**Aug**	**Sep**	**Oct**	**Nov**	**Dec**	**Annual**	**Years**
Mean 3pm wind speed (km/h)	20.9	20.9	19.3	23.2	29.2	30.6	33.6	33.4	33.3	29.2	23.1	19.0	26.3	39

Figure B.3.4 – Thursday Island site data (BOM 2008)

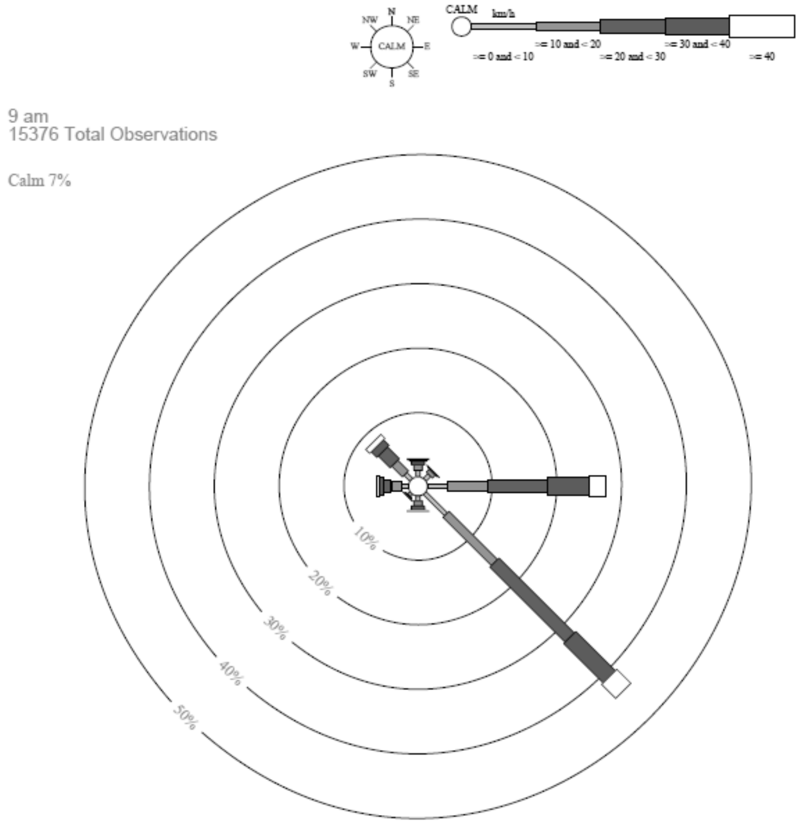

Figure B.3.5 – Thursday Island 9am wind rose (BOM 2008)

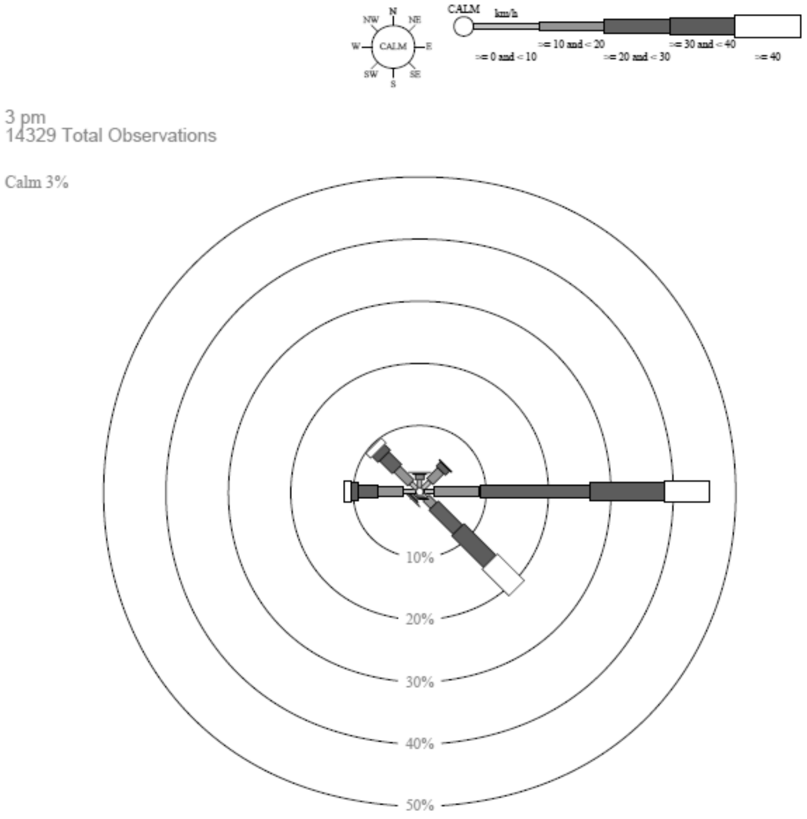

Figure B.3.6 – Thursday Island 3pm wind rose (BOM 2008)

Site information

Site name: LOCKHART RIVER AIRPORT
Site number: 028008
Latitude: 12.79 °S **Longitude:** 143.31 °E
Elevation: 17 m
Commenced: 1956 **Status:** Open
Latest available data: 04 Sep 2008

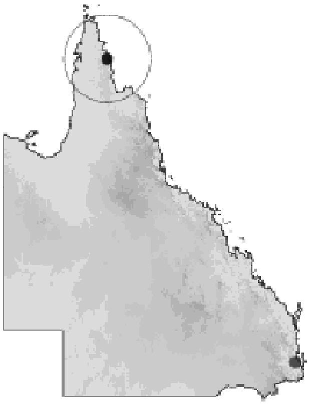

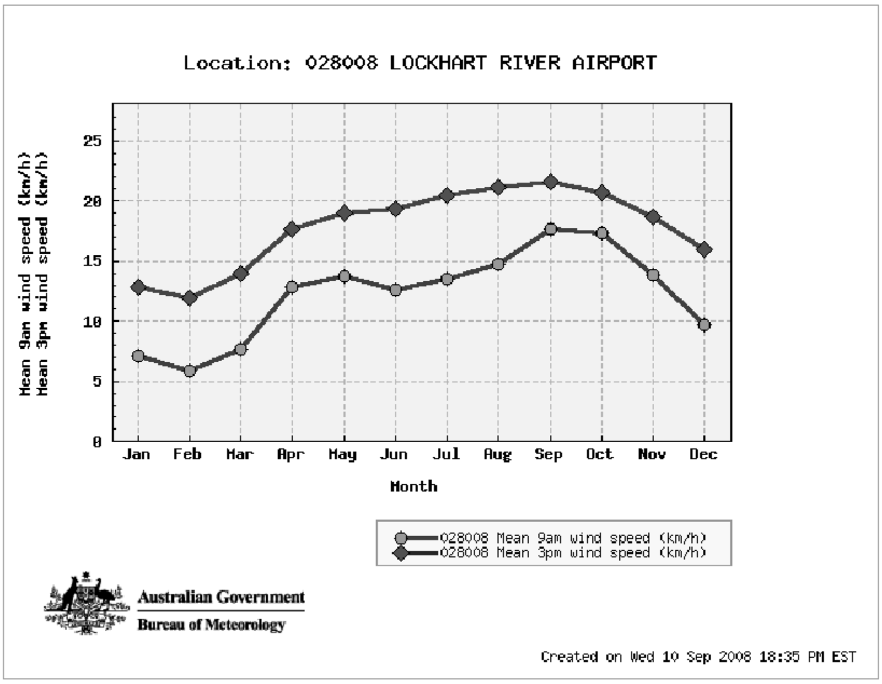

Statistics	Jan	Feb	Mar	Apr	May	Jun	Jul	Aug	Sep	Oct	Nov	Dec	Annual	Years
Mean 9am wind speed (km/h)	7.1	5.9	7.7	12.8	13.7	12.6	13.5	14.7	17.7	17.3	13.8	9.7	12.2	40
Statistics	**Jan**	**Feb**	**Mar**	**Apr**	**May**	**Jun**	**Jul**	**Aug**	**Sep**	**Oct**	**Nov**	**Dec**	**Annual**	**Years**
Mean 3pm wind speed (km/h)	12.8	11.9	13.9	17.7	19.0	19.3	20.5	21.2	21.6	20.7	18.7	16.0	17.8	38

Figure B.3.7 – Lockhart River Airport site data (BOM 2008)

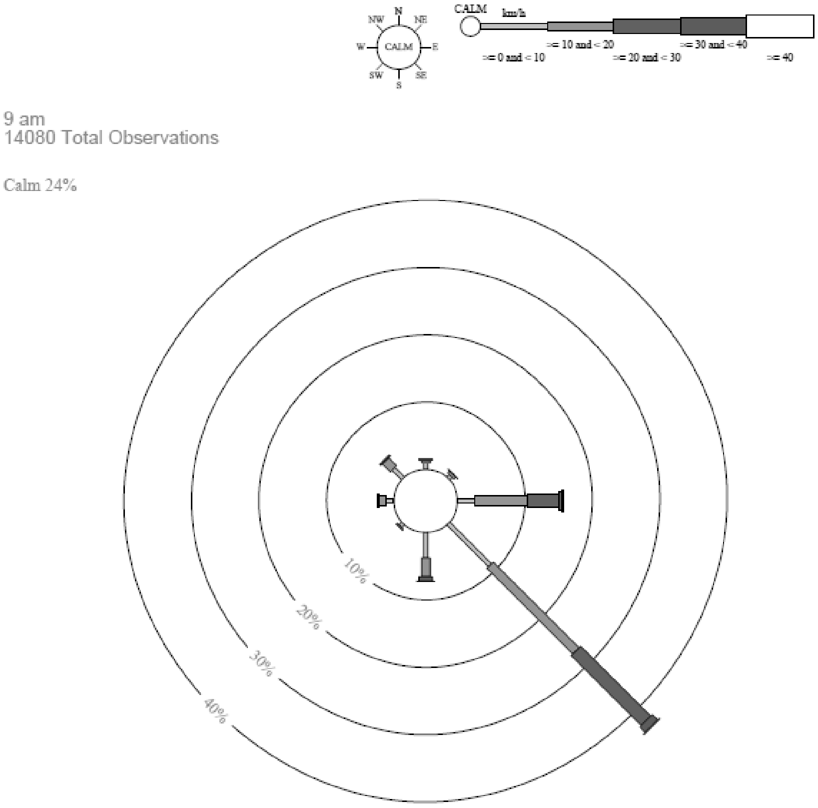

Figure B.3.8 – Lockhart River Airport 9am wind rose (BOM 2008)

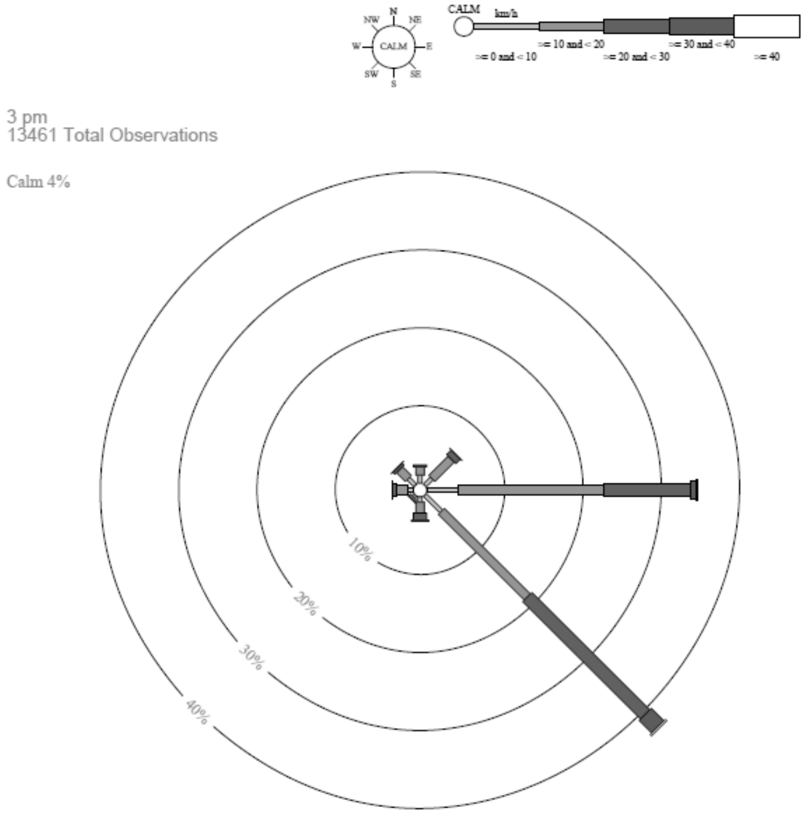

Figure B.3.9 – Lockhart River Airport 3pm wind rose (BOM 2008)

B.4 Ginlong PMG Data

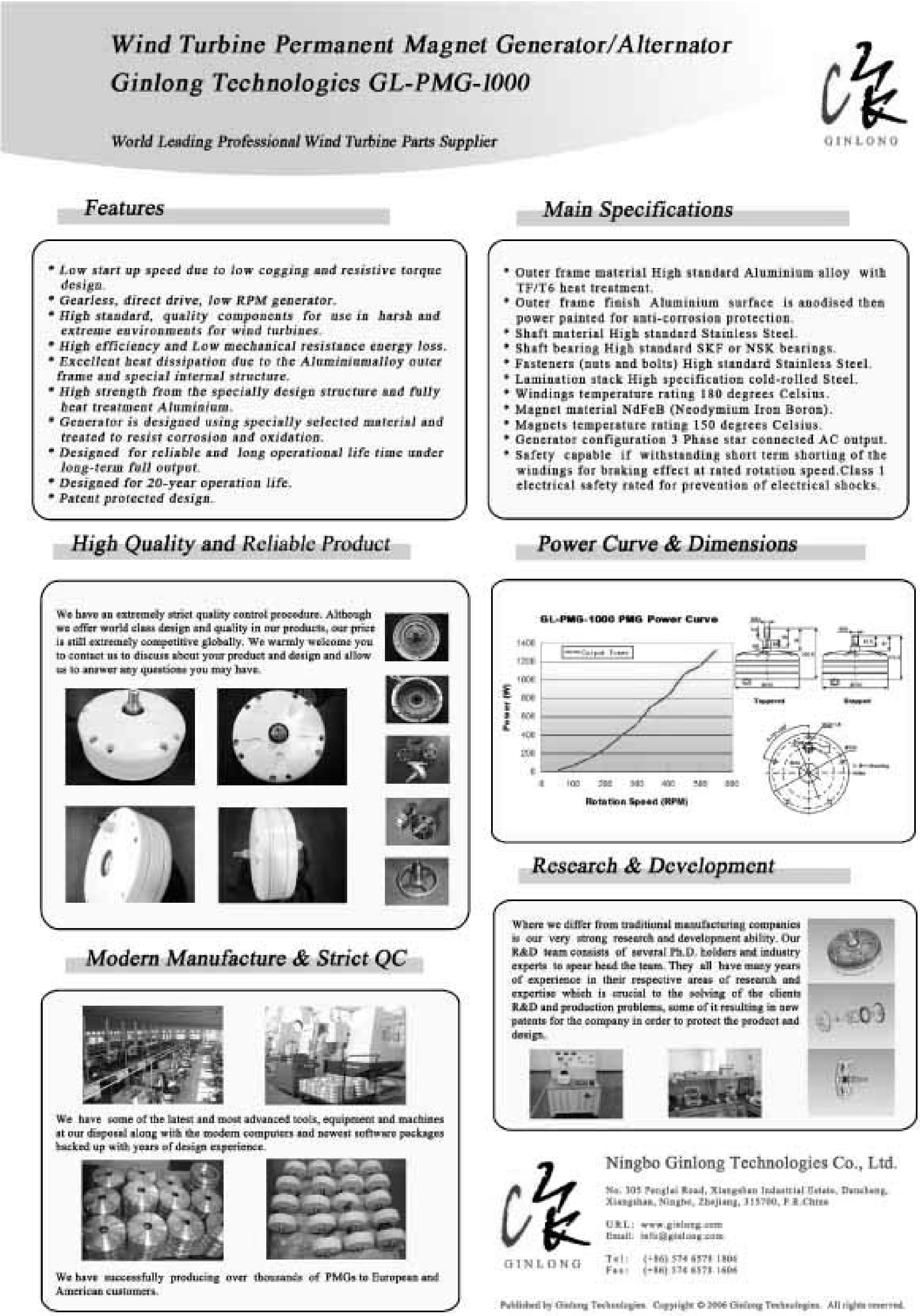

Wind Turbine Permanent Magnet Generator/Alternator
Ginlong Technologies GL-PMG-1000

World Leading Professional Wind Turbine Parts Supplier

GINLONG

Features

- *Low start up speed due to low cogging and resistive torque design.*
- *Gearless, direct drive, low RPM generator.*
- *High standard, quality components for use in harsh and extreme environments for wind turbines.*
- *High efficiency and Low mechanical resistance energy loss.*
- *Excellent heat dissipation due to the Aluminiumalloy outer frame and special internal structure.*
- *High strength from the specially design structure and fully heat treatment Aluminium.*
- *Generator is designed using specially selected material and treated to resist corrosion and oxidation.*
- *Designed for reliable and long operational life time under long-term full output.*
- *Designed for 20-year operation life.*
- *Patent protected design.*

Main Specifications

- Outer frame material High standard Aluminium alloy with TF/T6 heat treatment.
- Outer frame finish Aluminium surface is anodised then power painted for anti-corrosion protection.
- Shaft material High standard Stainless Steel.
- Shaft bearing High standard SKF or NSK bearings.
- Fasteners (nuts and bolts) High standard Stainless Steel.
- Lamination stack High specification cold-rolled Steel.
- Windings temperature rating 180 degrees Celsius.
- Magnet material NdFeB (Neodymium Iron Boron).
- Magnets temperature rating 150 degrees Celsius.
- Generator configuration 3 Phase star connected AC output.
- Safety capable if withstanding short term shorting of the windings for braking effect at rated rotation speed.Class 1 electrical safety rated for prevention of electrical shocks.

High Quality and Reliable Product

We have an extremely strict quality control procedure. Although we offer world class design and quality in our products, our price is still extremely competitive globally. We warmly welcome you to contact us to discuss about your product and design and allow us to answer any questions you may have.

Power Curve & Dimensions

Research & Development

Where we differ from traditional manufacturing companies is our very strong research and development ability. Our R&D team consists of several Ph.D. holders and industry experts to spear head the team. They all have many years of experience in their respective areas of research and expertise which is crucial to the solving of the clients R&D and production problems, some of it resulting in new patents for the company in order to protect the product and design.

Modern Manufacture & Strict QC

We have some of the latest and most advanced tools, equipment and machines at our disposal along with the modern computers and newest software packages backed up with years of design experience.

We have successfully producing over thousands of PMGs to European and American customers.

GINLONG

Ningbo Ginlong Technologies Co., Ltd.

No. 305 Fenglai Road, Xiangshan Industrial Estate, Dancheng,
Xiangshan, Ningbo, Zhejiang, 315700, P.R.China

URL: www.ginlong.com
Email: info@ginlong.com

Tel: (+86) 574 6578 1806
Fax: (+86) 574 6578 1606

Published by Ginlong Technologies. Copyright © 2006 Ginlong Technologies. All rights reserved.

Figure B.4.1 – Ginlong 1 kW Generator Specification (Ginlong 2006)

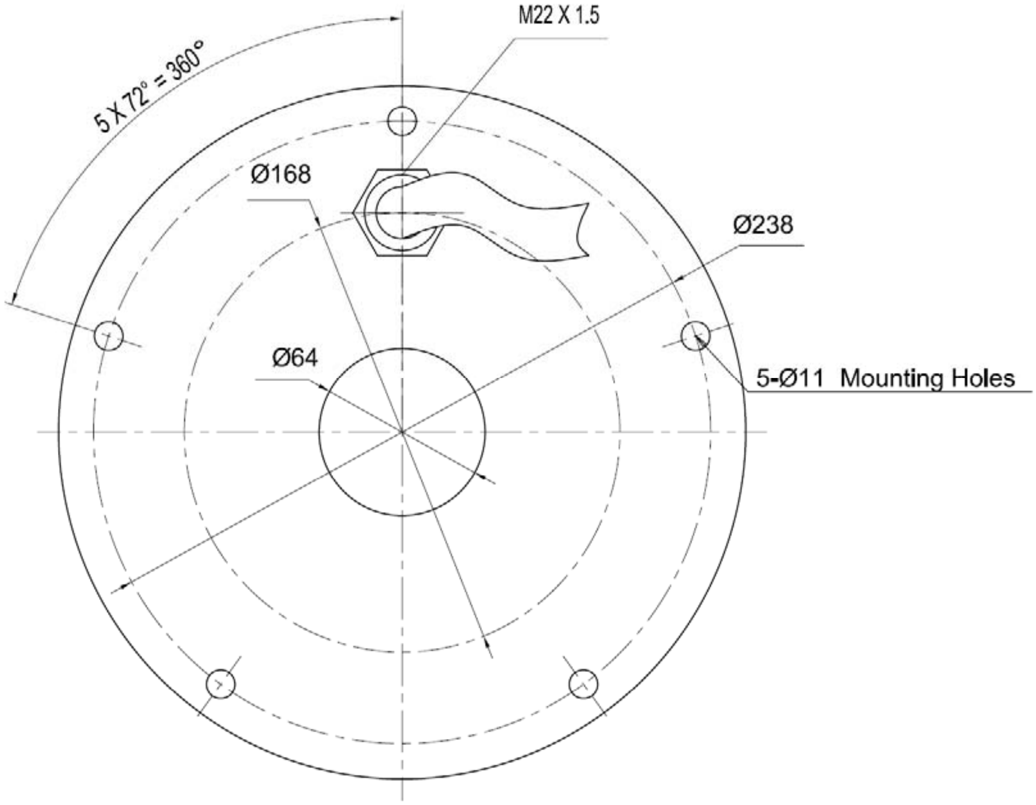

Figure B.4.2 – Ginlong 1 kW Generator mounting details (Ginlong 2006)

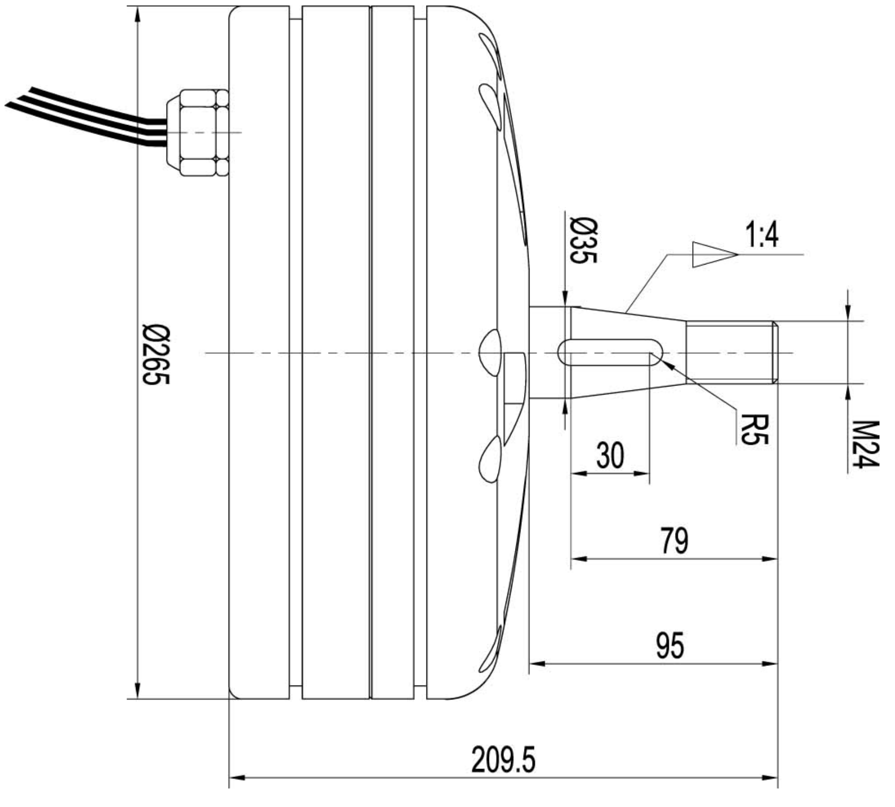

Figure B.4.3 – Ginlong 1 kW Generator shaft details (Ginlong 2006)

B.5 Manufacturing drawings

List of drawings:

SWT-08-001 - Small Wind Turbine

SWT-08-002 - Tower

SWT-08-003 - Turbine Body

SWT-08-004 - Rotor Hub

SWT-08-005 - Tail Boom

SWT-08-006 - Tail Vane

SWT-08-007 - Tail Pivot Pin

SWT-08-008 - Housing Cover

SWT-08-009 - Pivot Base

SWT-08-010 - Base Pivot Pin

SWT-08-011 - Tower Top Shaft

SWT-08-012 - Gin Pole

ITEM NO.	QTY.	Number	DESCRIPTION
1	1	-	GINLONG PMG-1000
2	2	-	APPLIED MAGNETS WINDMAX 8.5FT
3	1	SWT-08-004	ROTOR HUB
4	1	SWT-08-003	TURBINE BODY
5	1	SWT-08-006	TAIL VANE
6	1	SWT-08-005	TAIL BOOM
7	1	SWT-08-008	HOUSING COVER
8	1	SWT-08-007	TAIL PIVOT PIN
9	1	SWT-08-002	TOWER
10	1	SWT-08-011	TOWER TOP SHAFT
11	1	SWT-08-012	GIN POLE
12	1	SWT-08-009	PIVOT BASE
13	1	SWT-08-010	BASE PIVOT PIN

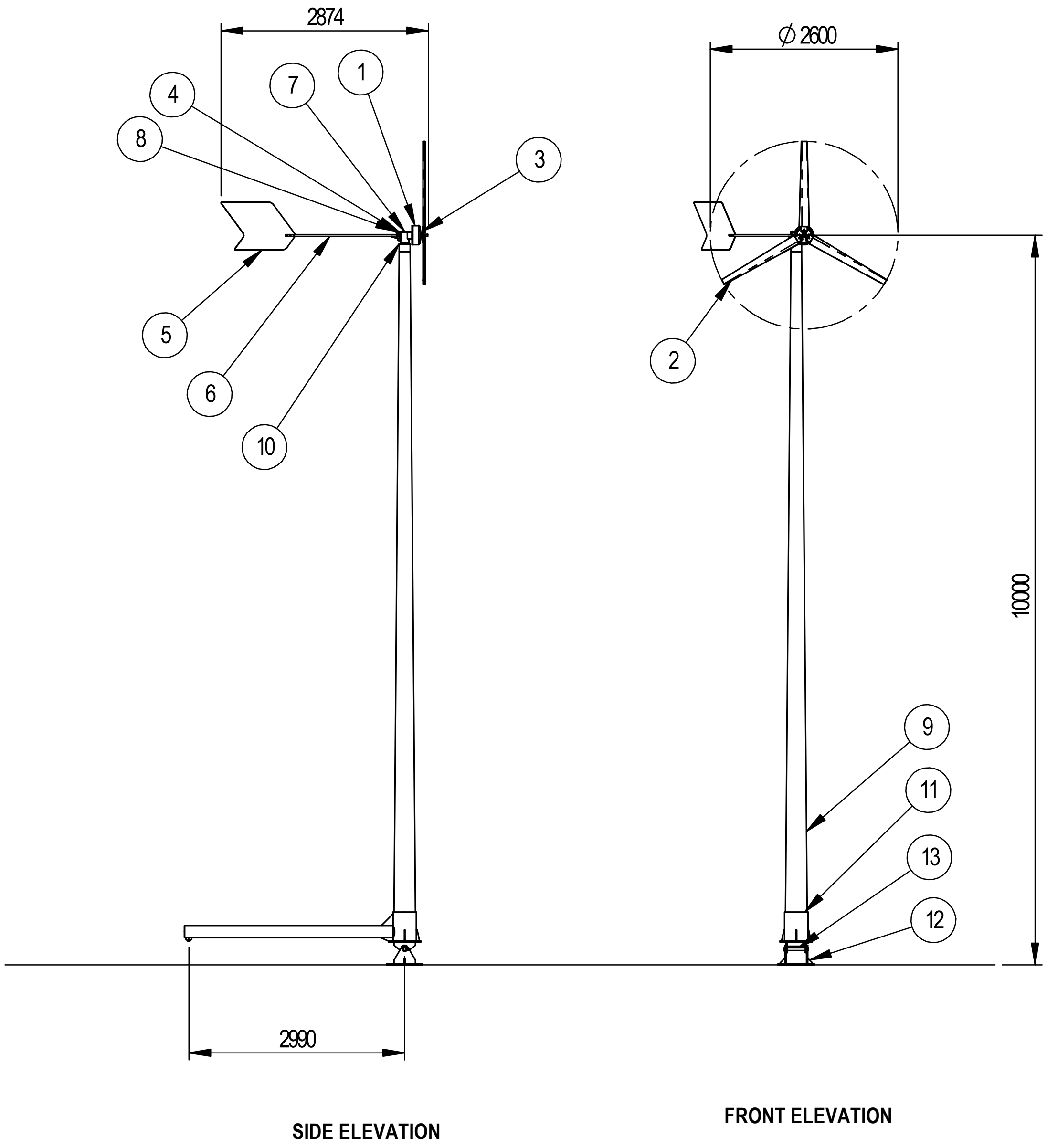

THIRD ANGLE PROJECTION

SCALE 1:100

	SIGNED	DATE
DRAWN	S. Strong	10.10.2008
CHECKED		
APPROVED		

UNLESS OTHERWISE SPECIFIED:
DIMENSIONS ARE IN MILLIMETERS
SURFACE FINISH: 3.2 U.N.O.
TOLERANCES:
LINEAR: ± 0.2 mm U.N.O.
ANGULAR: ± 1.0° U.N.O.
DEBUR AND BREAK SHARP EDGES

DO NOT SCALE

-

A4

SMALL WIND TURBINE

SMALL WIND TURBINE
GENERAL ARRANGEMENT

PART OF ASSY:

WEIGHT

DWG NO. SWT-08-001

SHEET 1 OF 1

A

Glass Fibre Reinforced Polymer Tower
Details:

60% Volume Fraction
0-90° 800 gsm Woven Cloth
1mm CSM layer external
Gel Coat outer layer

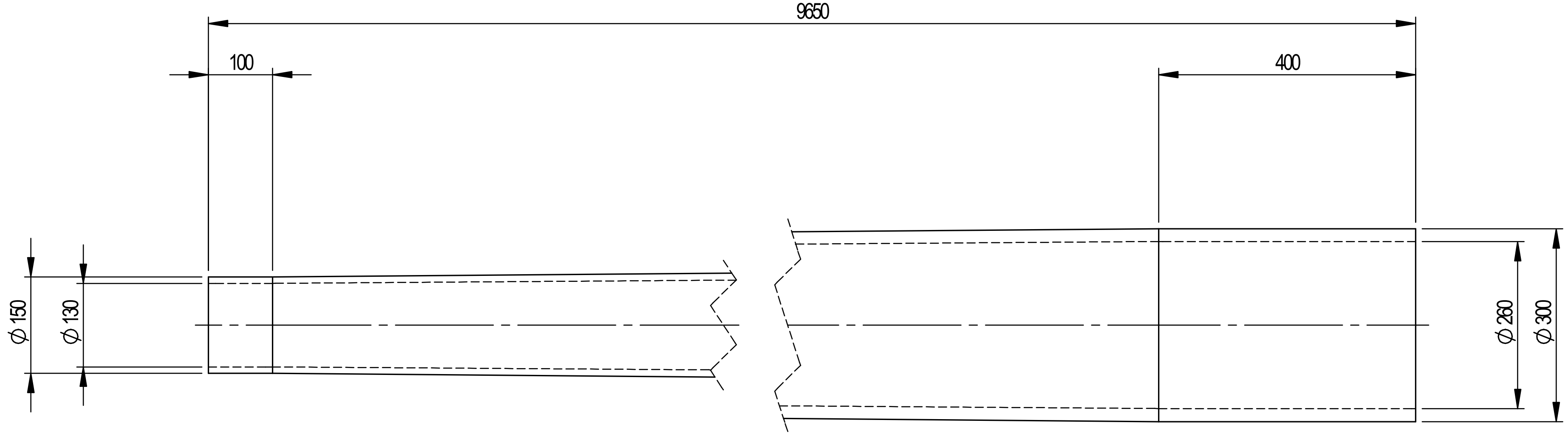

THIRD ANGLE PROJECTION
SCALE 1:10

SIGNED		DATE
DRAWN	S. Strong	10.10.2008
CHECKED		
APPROVED		

UNLESS OTHERWISE SPECIFIED:
DIMENSIONS ARE IN MILLIMETERS
SURFACE FINISH: 3.2 U.N.O.
TOLERANCES:
LINEAR: ± 0.2 mm U.N.O.
ANGULAR: ± 1.0° U.N.O.
DEBUR AND BREAK SHARP EDGES
DO NOT SCALE

-
A4
SMALL WIND TURBINE
TOWER
DETAIL

PART OF ASSY:
WEIGHT 247359.58 g
DWG NO. SWT-08-002
SHEET 1 OF 1
A

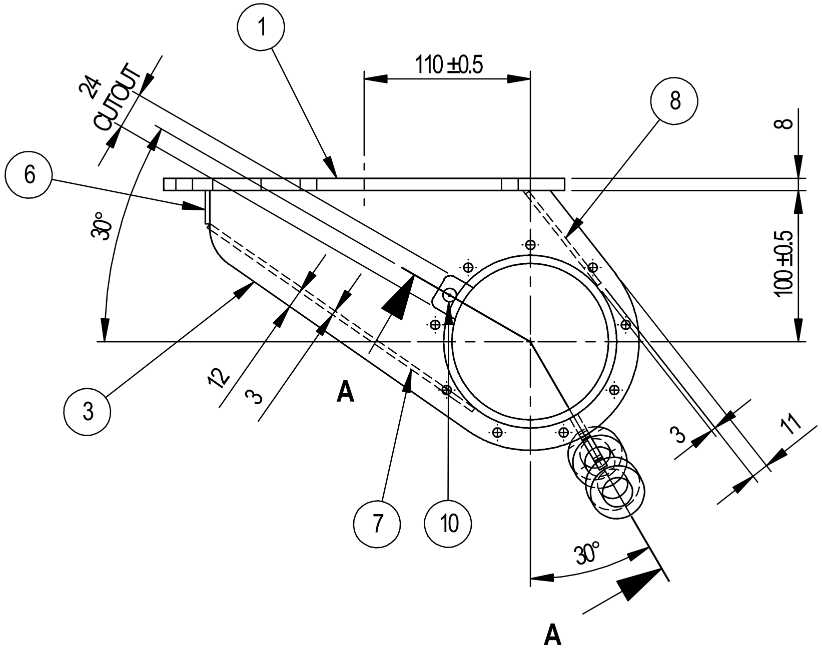

ITEM NO.	QTY.	DESCRIPTION	LENGTH	MATERIAL
1	1	8 THICK PLATE	Ø265	Gr. 250 M/S
2	1	Ø114.30 x 5.40 WALL CHS	150	Gr. 250 M/S
3	1	5 THICK PLATE	284 x 172	Gr. 250 M/S
4	2	Ø36 ROUND BAR	25	1020 M/S
5	1	6 THICK PLATE	100 x 39	Gr. 250 M/S
6	1	3 THICK PLATE	90 x 22	Gr. 250 M/S
7	1	3 THICK PLATE	213.5 x 90	Gr. 250 M/S
8	1	3 THICK PLATE	77 x 90	Gr. 250 M/S
9	1	5 THICK PLATE	253 x 141	Gr. 250 M/S
10	1	Ø9 ROUND BAR	20	1020 M/S

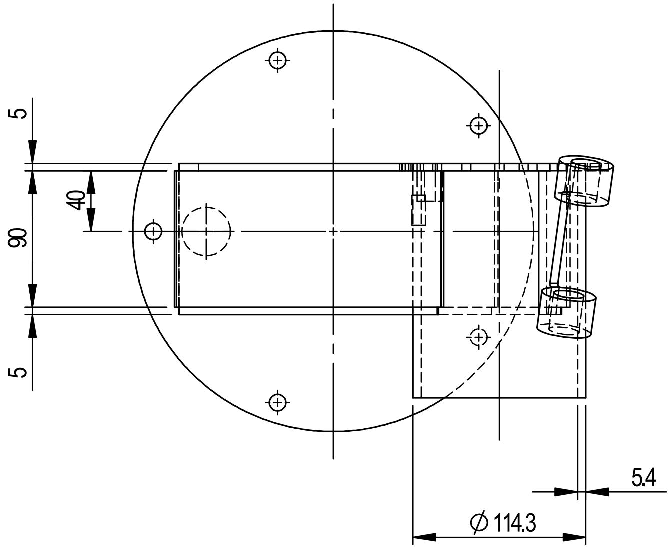

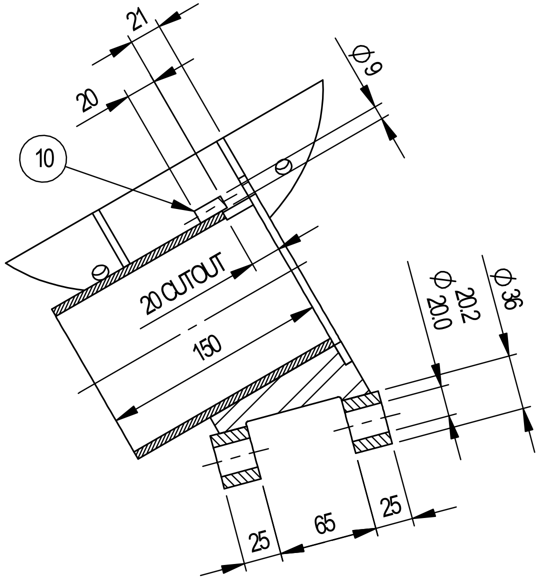

SECTION A-A

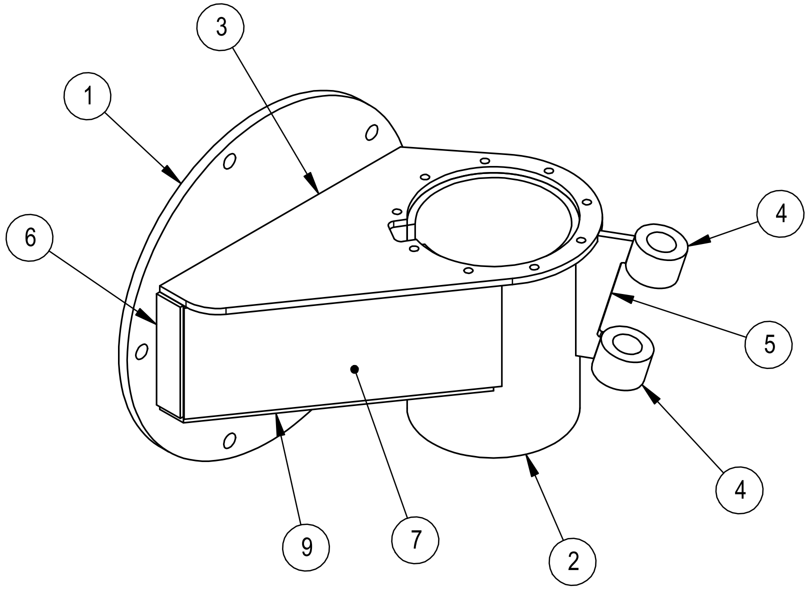

ISOMETRIC VIEW

NOTE:
BREAK ALL SHARP EDGES
ALL WELDS 6 C.F.W. U.N.O.

THIRD ANGLE PROJECTION
SCALE 1:5
SIGNED
DATE
-
A4

UNLESS OTHERWISE SPECIFIED:
DIMENSIONS ARE IN MILLIMETERS
SURFACE FINISH: 3.2 U.N.O.
TOLERANCES:
LINEAR: ± 0.2 mm U.N.O.
ANGULAR: ± 1.0° U.N.O.
DEBUR AND BREAK SHARP EDGES
DO NOT SCALE

DRAWN	S. Strong	10.10.2008
CHECKED		
APPROVED		

SMALL WIND TURBINE
TURBINE BODY
DETAIL

PART OF ASSY:
WEIGHT
DWG NO. SWT-08-003
SHEET 1 OF 2
A

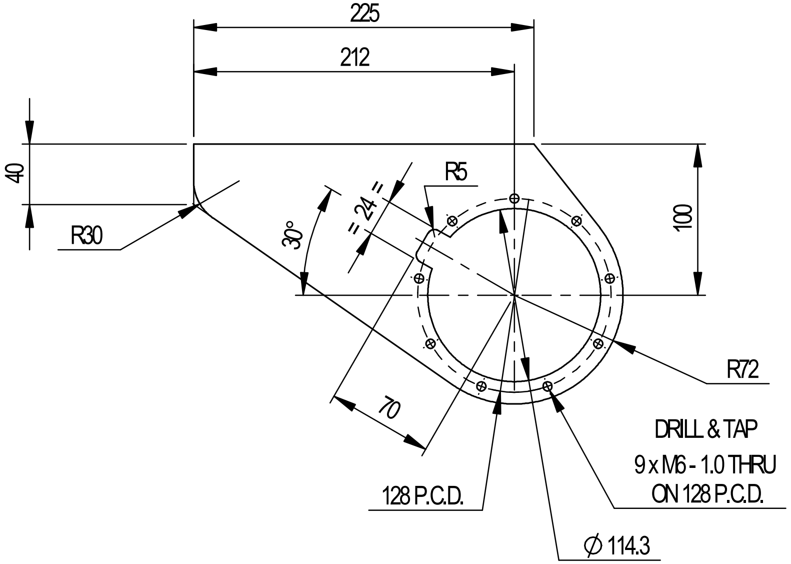

ITEM 3 DETAIL

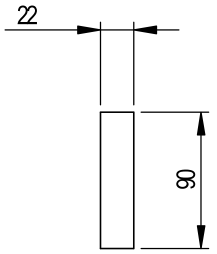

ITEM 6 DETAIL

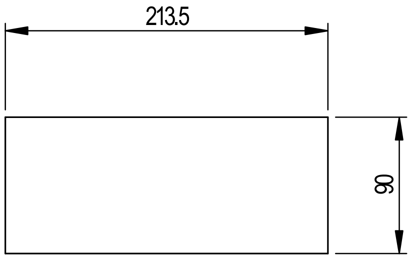

ITEM 7 DETAIL

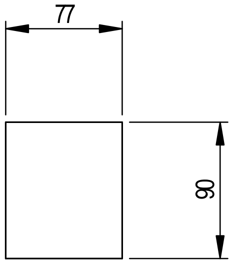

ITEM 8 DETAIL

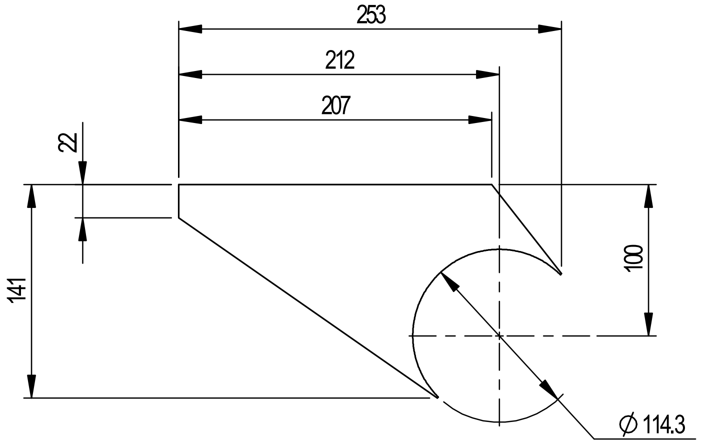

ITEM 9 DETAIL

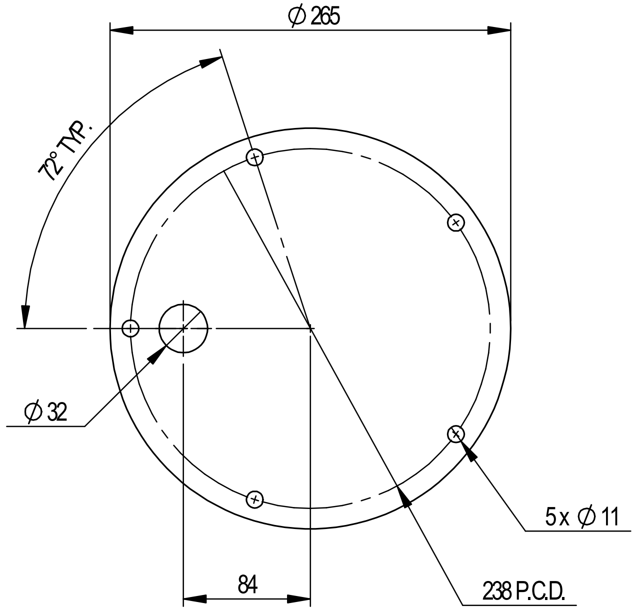

ITEM 1 DETAIL

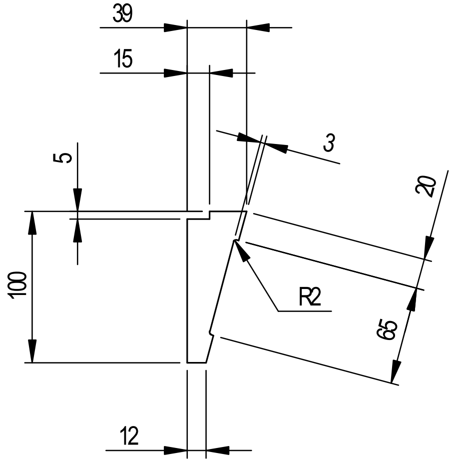

ITEM 5 DETAIL

NOTE:
BREAK ALL SHARP EDGES

THIRD ANGLE PROJECTION	SCALE 1:5	SIGNED	DATE	-	A4
UNLESS OTHERWISE SPECIFIED: DIMENSIONS ARE IN MILLIMETERS SURFACE FINISH: 3.2 U.N.O. TOLERANCES: LINEAR: ±0.2 mm U.N.O. ANGULAR: ±1.0° U.N.O.	DRAWN	S. Strong	10.10.2008	SMALL WIND TURBINE	
	CHECKED			TURBINE BODY	
	APPROVED			DETAIL	
DEBUR AND BREAK SHARP EDGES DO NOT SCALE	PART OF ASSY:	WEIGHT	DWG NO. SWT-08-003	SHEET 2 OF 2	A

ITEM NO.	QTY.	DESCRIPTION	LENGTH	MATERIAL
1	1	20 THICK PLATE	Ø200	250 M/S

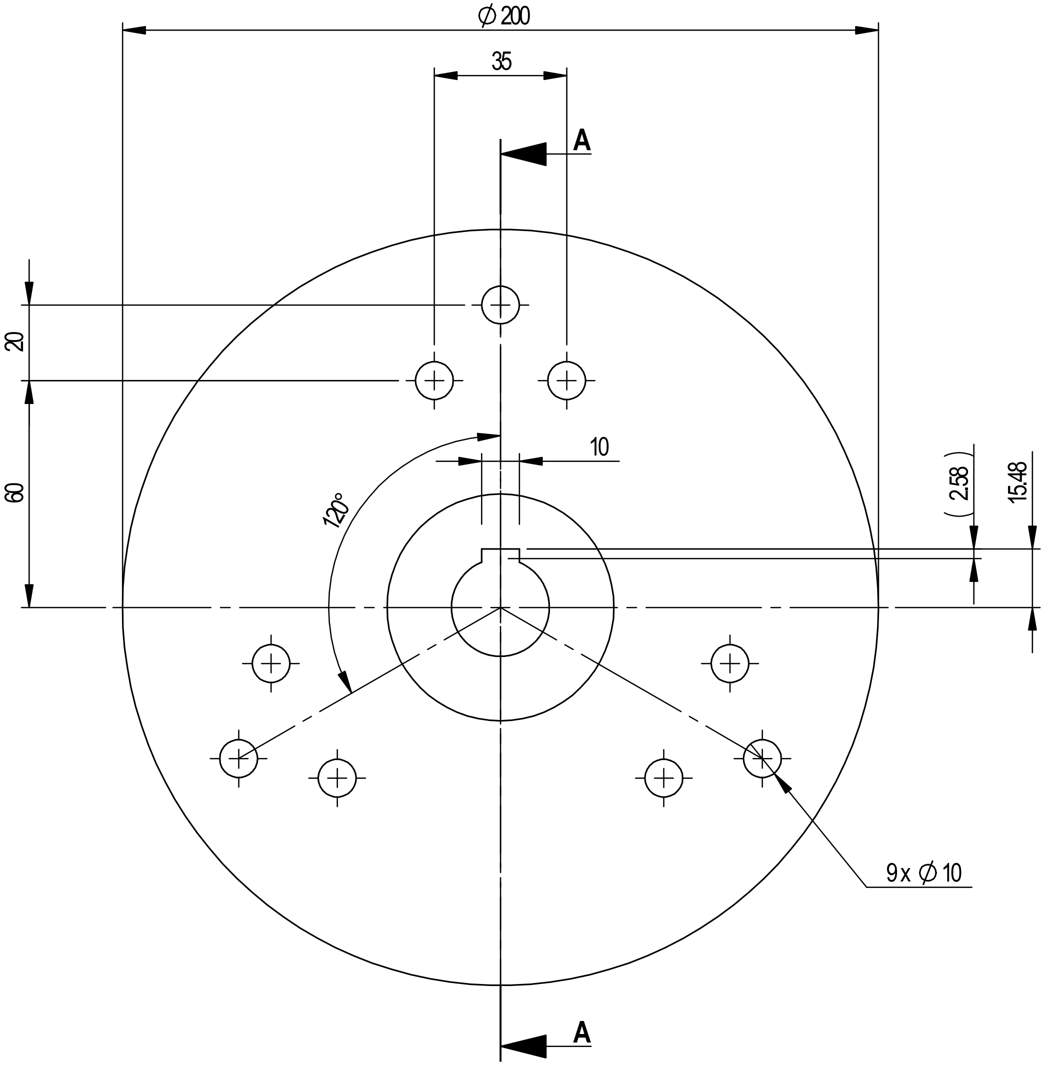

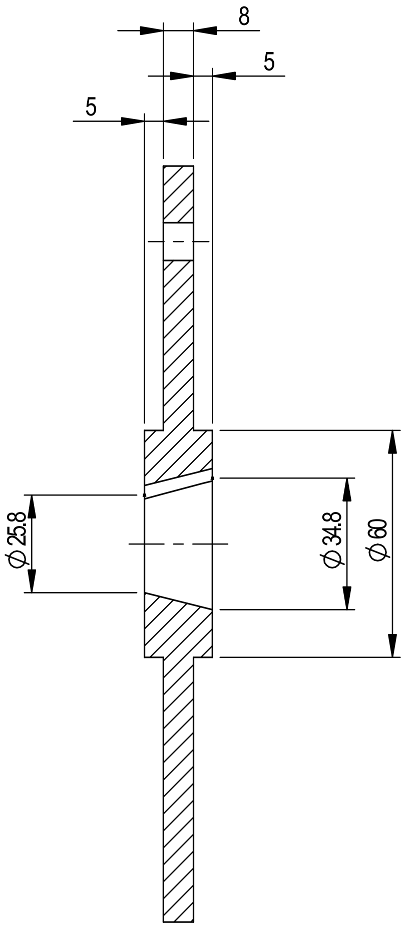

SECTION A-A

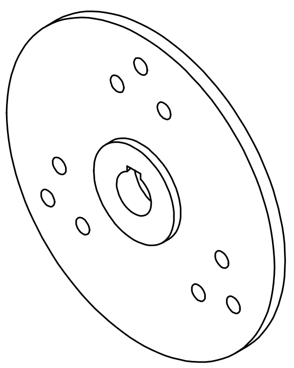

ISOMETRIC VIEW

NOTE:
BREAK ALL SHARP EDGES

THIRD ANGLE PROJECTION	SCALE 1:2	SIGNED	DATE	- A4
UNLESS OTHERWISE SPECIFIED: DIMENSIONS ARE IN MILLIMETERS SURFACE FINISH: 3.2 U.N.O. TOLERANCES: LINEAR: ±0.2 mm U.N.O. ANGULAR: ±1.0° U.N.O.	DRAWN	S. Strong	10.10.2008	SMALL WIND TURBINE
	CHECKED			ROTOR HUB
	APPROVED			DETAIL
DEBUR AND BREAK SHARP EDGES	PART OF ASSY: SWT-08-100		WEIGHT 2030.79 g	DWG NO. SWT-08-004 SHEET 1 OF 1 A
DO NOT SCALE				

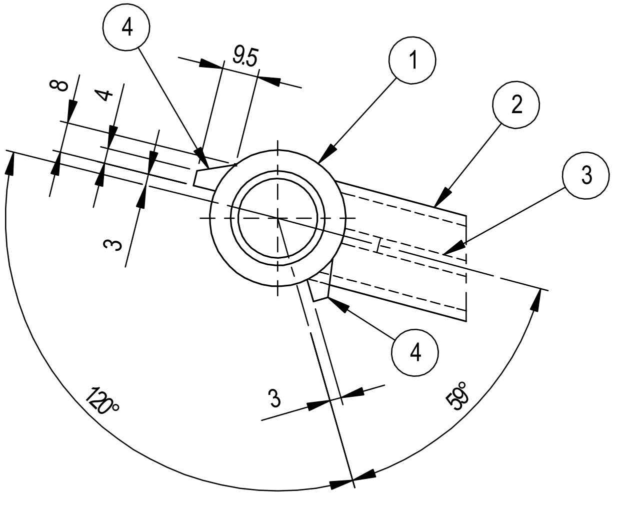

VIEW A
SCALE 1 : 2

ITEM NO.	QTY.	DESCRIPTION	LENGTH	MATERIAL
1	1	Ø36 ROUND BAR	64	1020 M/S
2	1	Ø26.90 x 2.60 WALL CHS	1800	Gr. 250 M/S
3	1	4 THICK PLATE	100 x 25	Gr. 250 M/S
4	2	8 THICK PLATE	9.5 x 50	Gr. 250 M/S

ALL WELDS 4 C.F.W. U.N.O.

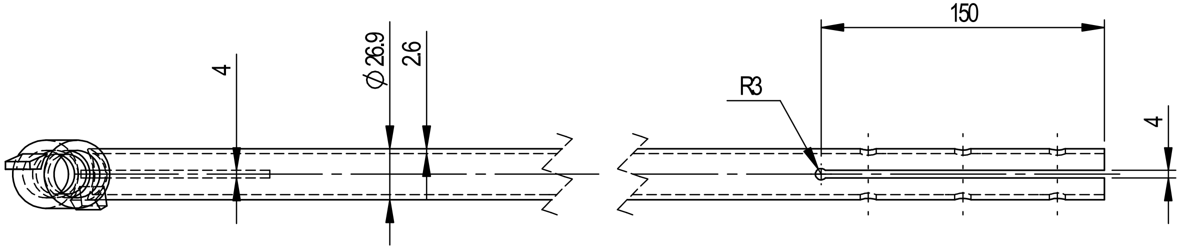

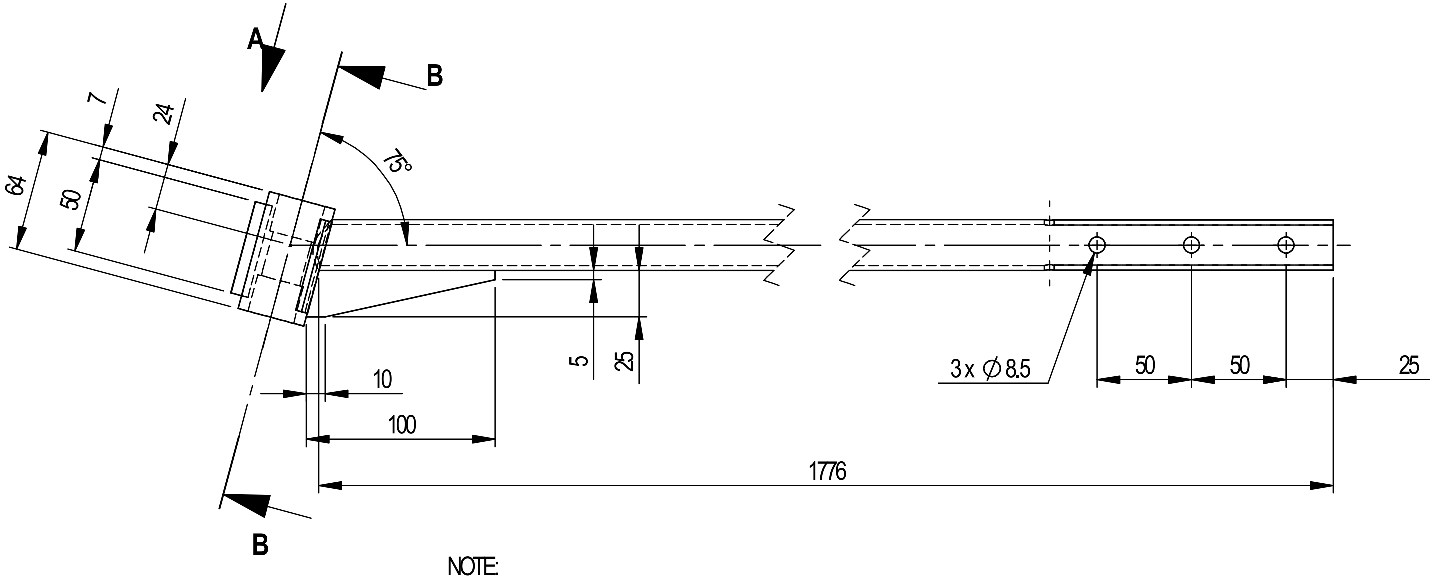

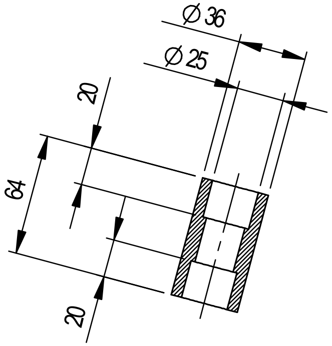

SECTION B-B

NOTE:
BREAK ALL SHARP EDGES

THIRD ANGLE PROJECTION	SCALE 1:4	SIGNED	DATE	-		A4
UNLESS OTHERWISE SPECIFIED: DIMENSIONS ARE IN MILLIMETERS SURFACE FINISH: 3.2 U.N.O. TOLERANCES: LINEAR: ±0.2 mm U.N.O. ANGULAR: ±1.0° U.N.O.	DRAWN	S. Strong	10.10.2008	SMALL WIND TURBINE		
	CHECKED			TAIL BOOM		
	APPROVED			DETAIL		
DEBUR AND BREAK SHARP EDGES	PART OF ASSY:		WEIGHT	DWG NO. SWT-08-005	SHEET 1 OF 1	A
DO NOT SCALE						

ITEM NO.	QTY.	DESCRIPTION	LENGTH	MATERIAL
1	1	4 THICK PLATE	1179 x 660	AL

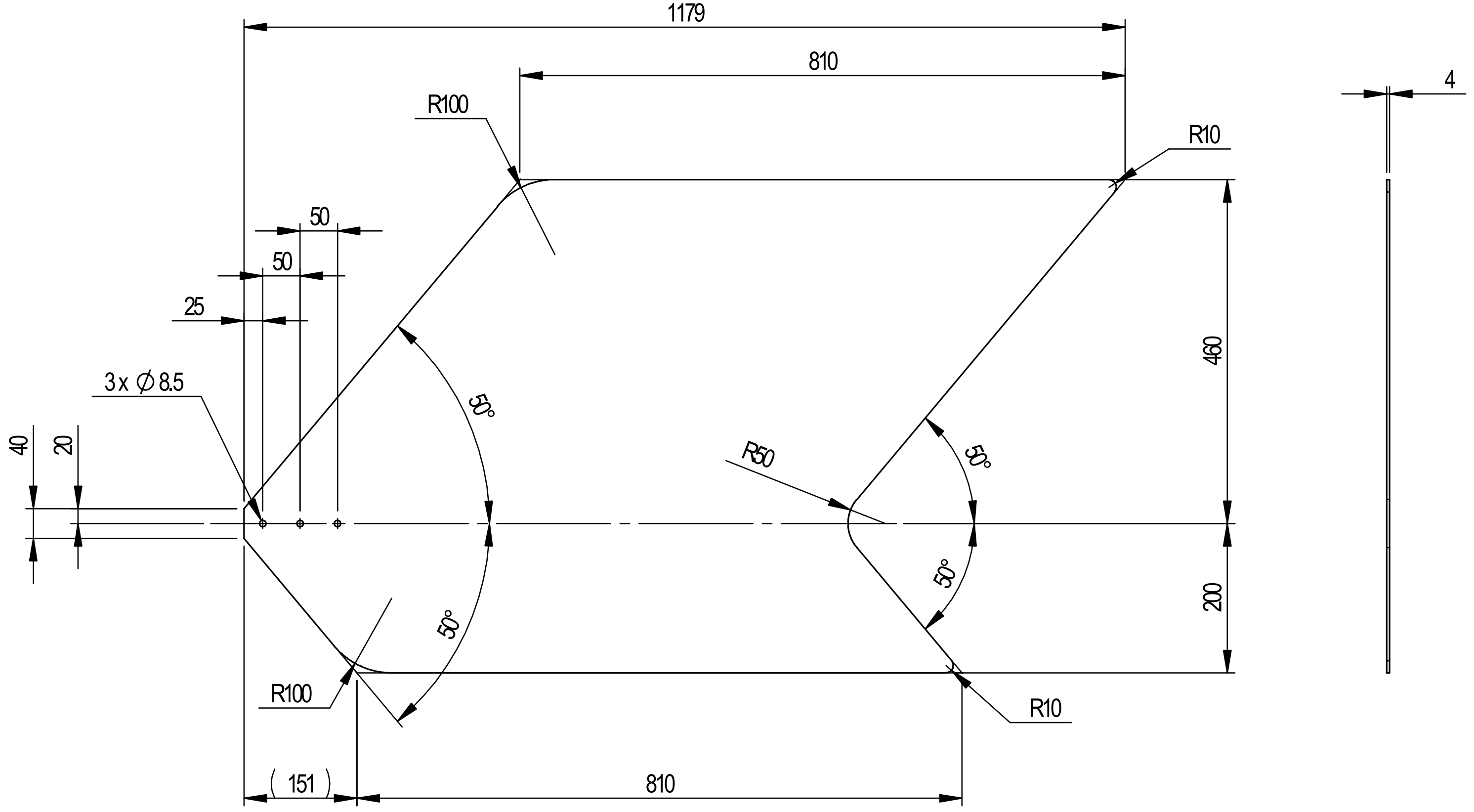

NOTE:
BREAK ALL SHARP EDGES

THIRD ANGLE PROJECTION	SCALE 1:10	SIGNED	DATE	-	A4
UNLESS OTHERWISE SPECIFIED: DIMENSIONS ARE IN MILLIMETERS SURFACE FINISH: 3.2 U.N.O. TOLERANCES: LINEAR: ± 0.2 mm U.N.O. ANGULAR: ± 1.0° U.N.O.	DRAWN	S. Strong	10.10.2008	SMALL WIND TURBINE	
	CHECKED			TAIL VANE	
	APPROVED			DETAIL	
DEBUR AND BREAK SHARP EDGES	PART OF ASSY:	WEIGHT		DWG NO. SWT-08-006	SHEET 1 OF 1
DO NOT SCALE					A

ITEM NO.	QTY.	DESCRIPTION	LENGTH	MATERIAL
1	1	Ø20 ROUND BAR	128	1020 M/S

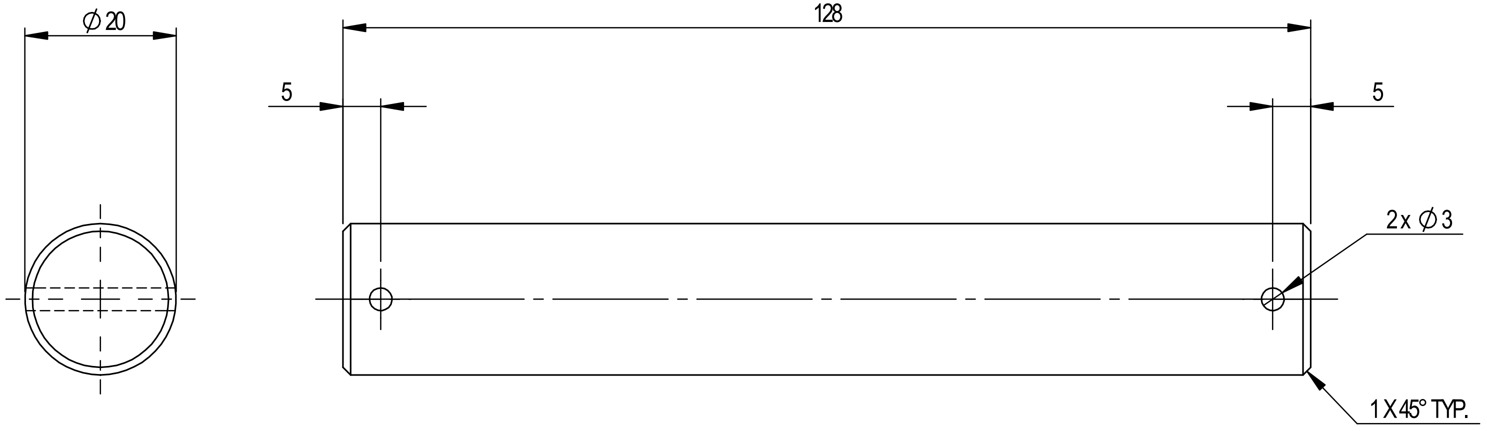

NOTE:
BREAK ALL SHARP EDGES

THIRD ANGLE PROJECTION	SCALE 1:1	SIGNED	DATE	-	A4
UNLESS OTHERWISE SPECIFIED: DIMENSIONS ARE IN MILLIMETERS SURFACE FINISH: 3.2 U.N.O. TOLERANCES: LINEAR: ± 0.2 mm U.N.O. ANGULAR: ± 1.0° U.N.O.	DRAWN	S. Strong	10.10.2008	SMALL WIND TURBINE	
	CHECKED			TAIL PIVOT PIN	
	APPROVED			DETAIL	
DEBUR AND BREAK SHARP EDGES	PART OF ASSY:		WEIGHT	DWG NO. SWT-08-007	SHEET 1 OF 1 A
DO NOT SCALE					

ITEM NO.	QTY.	DESCRIPTION	LENGTH	MATERIAL
1	1	4 THICK PLATE	Ø144	AL

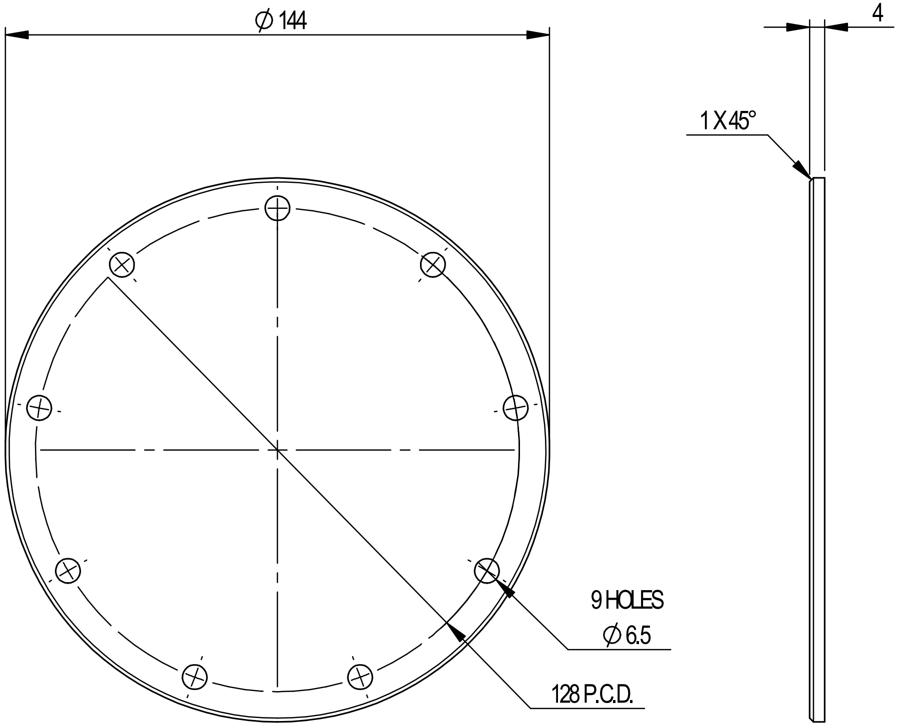

NOTE:
BREAK ALL SHARP EDGES

THIRD ANGLE PROJECTION

UNLESS OTHERWISE SPECIFIED:
DIMENSIONS ARE IN MILLIMETERS
SURFACE FINISH: 3.2 U.N.O.
TOLERANCES:
LINEAR: ± 0.2 mm U.N.O.
ANGULAR: ± 1.0° U.N.O.

DEBUR AND BREAK SHARP EDGES

DO NOT SCALE

SCALE 1:2	SIGNED	DATE
DRAWN	S. Strong	10.10.2008
CHECKED		
APPROVED		

PART OF ASSY:

WEIGHT

-

A4

SMALL WIND TURBINE
HOUSING COVER
DETAIL

DWG NO. SWT-08-008

SHEET 1 OF 1

A

ITEM NO.	QTY.	DESCRIPTION	LENGTH	MATERIAL
1	1	20 THICK PLATE	500 x 500	Gr. 250 M/S
2	1	16 THICK PLATE	300 x 150	Gr. 250 M/S
3	2	16 THICK PLATE	65 x 65	Gr. 250 M/S
4	1	16 THICK PLATE	300 x 150	Gr. 250 M/S

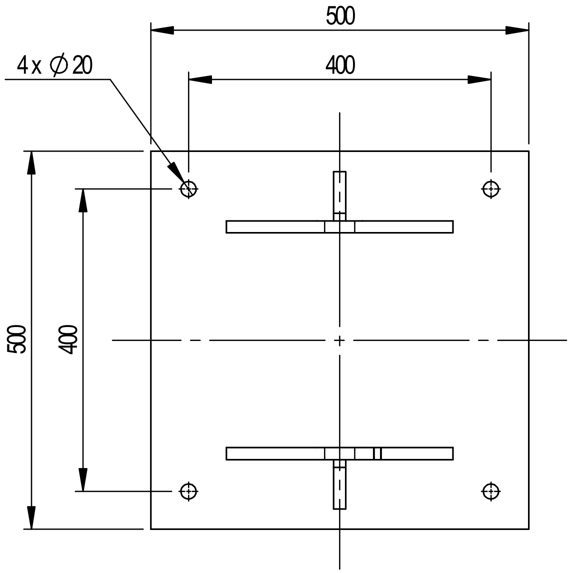

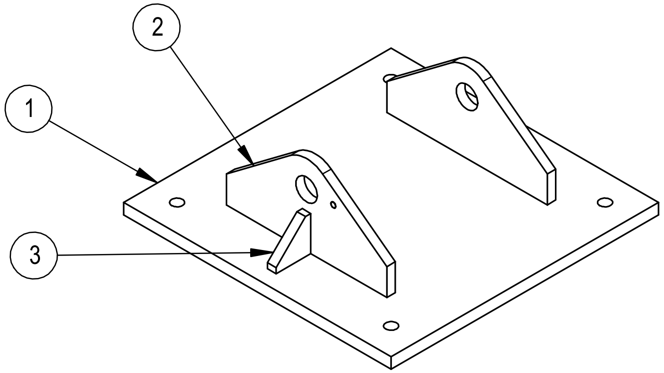

ISOMETRIC VIEW

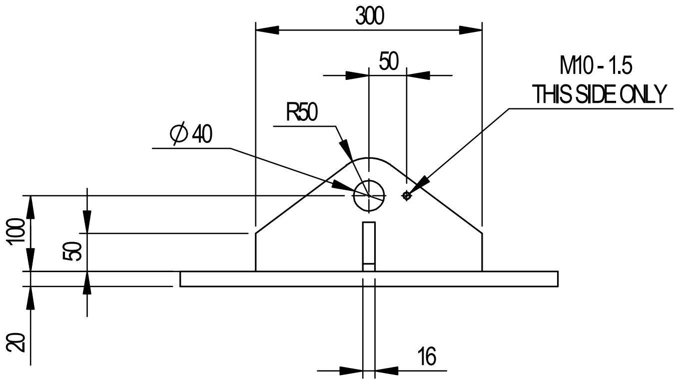

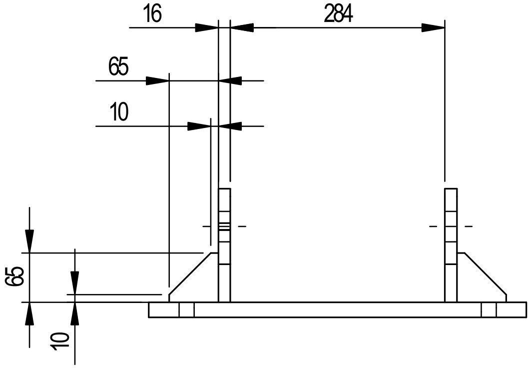

NOTE:
BREAK ALL SHARP EDGES
8 C.F.W. ALL AROUND U.N.O.

THIRD ANGLE PROJECTION
SCALE 1:10
UNLESS OTHERWISE SPECIFIED:
DIMENSIONS ARE IN MILLIMETERS
SURFACE FINISH: 3.2 U.N.O.
TOLERANCES:
LINEAR: ± 0.2 mm U.N.O.
ANGULAR: ± 1.0° U.N.O.
DEBUR AND BREAK SHARP EDGES
DO NOT SCALE

	SIGNED	DATE
DRAWN	S. Strong	10.10.2008
CHECKED		
APPROVED		

PART OF ASSY:
WEIGHT

-
A4
SMALL WIND TURBINE
PIVOT BASE
DETAIL
DWG NO. SWT-08-009
SHEET 1 OF 1
A

ITEM NO.	QTY.	DESCRIPTION	LENGTH	MATERIAL
1	1	Ø40 ROUND BAR	330	1020 M/S
2	1	6 THICK PLATE	93 x 56	Gr. 250 M/S

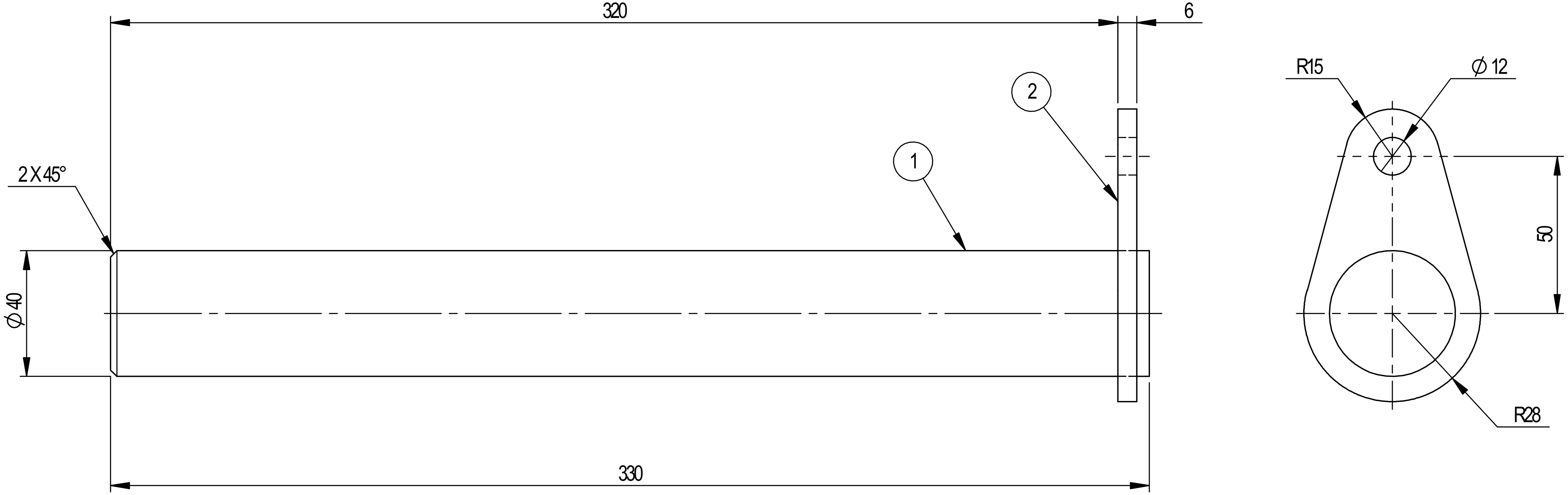

NOTE:
BREAK ALL SHARP EDGES
4 C.F.W. ALL AROUND U.N.O.

THIRD ANGLE PROJECTION	SCALE 1:2	SIGNED	DATE	-	A4
UNLESS OTHERWISE SPECIFIED: DIMENSIONS ARE IN MILLIMETERS SURFACE FINISH: 3.2 U.N.O. TOLERANCES: LINEAR: ±0.2 mm U.N.O. ANGULAR: ±1.0° U.N.O.	DRAWN	S. Strong	10.10.2008	SMALL WIND TURBINE	
	CHECKED			BASE PIVOT PIN	
	APPROVED			DETAIL	
DEBUR AND BREAK SHARP EDGES DO NOT SCALE	PART OF ASSY:		WEIGHT	DWG NO. SWT-08-010	SHEET 1 OF 1 A

ITEM NO.	QTY.	DESCRIPTION	LENGTH	MATERIAL
1	1	Ø90 ROUND BAR	90	1020 M/S
2	1	10 THICK PLATE	Ø164	Gr. 250 M/S
3	1	128.70 x 5.40 WALL CHS	100	Gr. 250 M/S

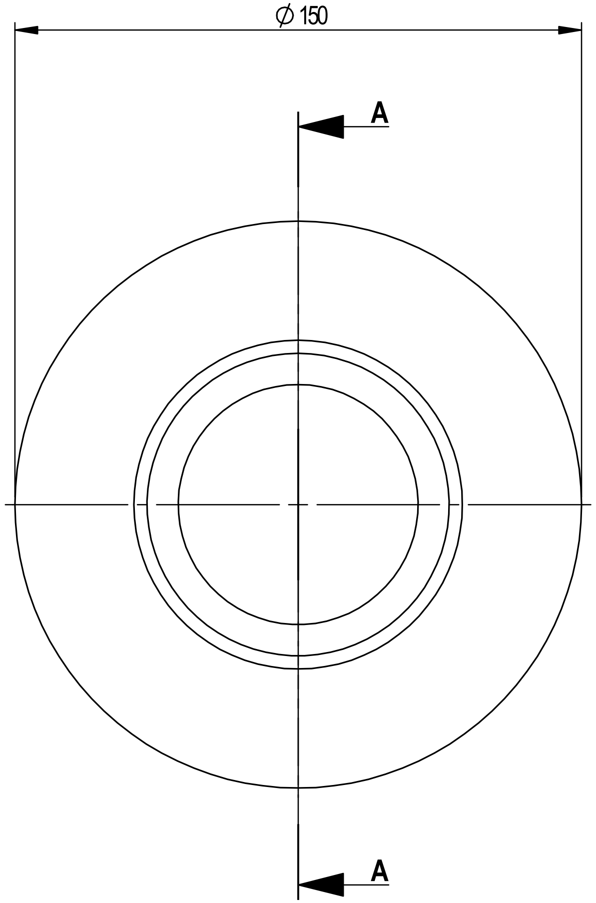

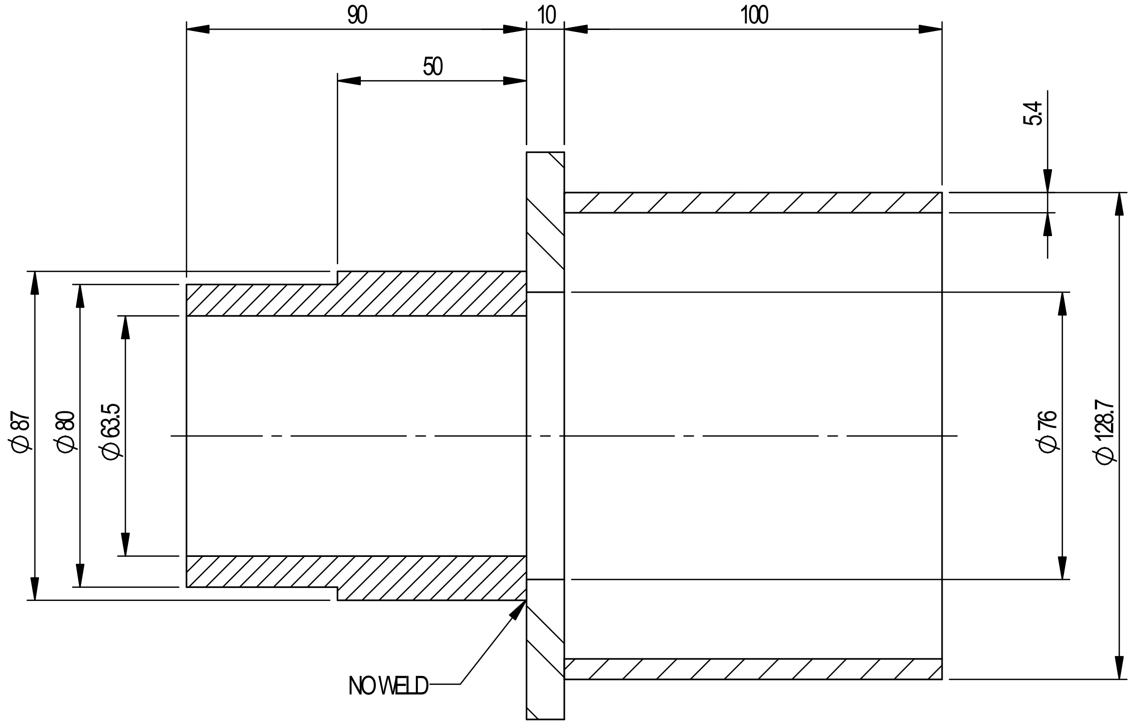

SECTION A-A

NOTE:
BREAK ALL SHARP EDGES
6 C.F. WALL AROUND U.N.O.

THIRD ANGLE PROJECTION

UNLESS OTHERWISE SPECIFIED:
DIMENSIONS ARE IN MILLIMETERS
SURFACE FINISH: 3.2 U.N.O.
TOLERANCES:
LINEAR: ± 0.2 mm U.N.O.
ANGULAR: ± 1.0° U.N.O.
DEBUR AND BREAK SHARP EDGES

DO NOT SCALE

SCALE 1:2	SIGNED	DATE
DRAWN	S. Strong	10.10.2008
CHECKED		
APPROVED		

-

A4

SMALL WIND TURBINE
TOWER TOP SHAFT
DETAIL

PART OF ASSY:

WEIGHT

DWG NO. SWT-08-011

SHEET 1 OF 1

A

ITEM NO.	QTY.	DESCRIPTION	LENGTH	MATERIAL
1	1	323.90 x 9.50 WALL CHS	400	Gr. 250 M/S
2	1	12 THICK PLATE	Ø450	Gr. 250 M/S
3	2	16 THICK PLATE	300 x 150	Gr. 250 M/S
4	3	12 THICK PLATE	150 x 40	Gr. 250 M/S
5	2	12 THICK PLATE	248 x 60	Gr. 250 M/S
6	1	168.30 x 4.80 WALL CHS	3050	Gr. 250 M/S
7	1	12 THICK PLATE	150 x 46	Gr. 250 M/S
8	1	12 THICK PLATE	150 x 150	Gr. 250 M/S
9	1	16 THICK PLATE	80 x 50	Gr. 250 M/S
10	1	3 THICK PLATE	Ø158.7	Gr. 250 M/S

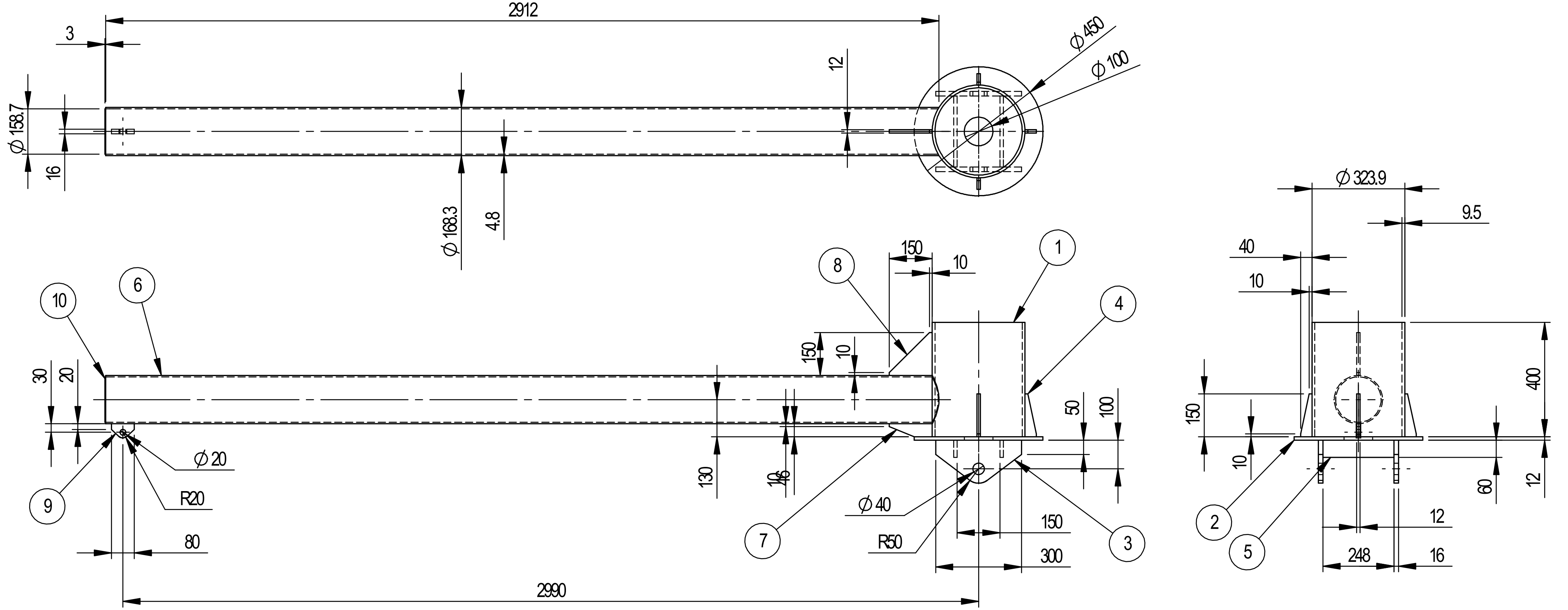

NOTE:
BREAK ALL SHARP EDGES

THIRD ANGLE PROJECTION	SCALE 1:20	SIGNED	DATE	-	A4
UNLESS OTHERWISE SPECIFIED: DIMENSIONS ARE IN MILLIMETERS SURFACE FINISH: 3.2 U.N.O. TOLERANCES: LINEAR: ±0.2mm U.N.O. ANGULAR: ±1.0° U.N.O. DEBUR AND BREAK SHARP EDGES	DRAWN	S. Strong	10.10.2008	SMALL WIND TURBINE	
	CHECKED			GIN POLE	
	APPROVED			DETAIL	
DO NOT SCALE	PART OF ASSY:		WEIGHT	DWG NO. SWT-08-012	SHEET 1 OF 1 A

B.6 Properties of GFRP Orthotropic Elasticity

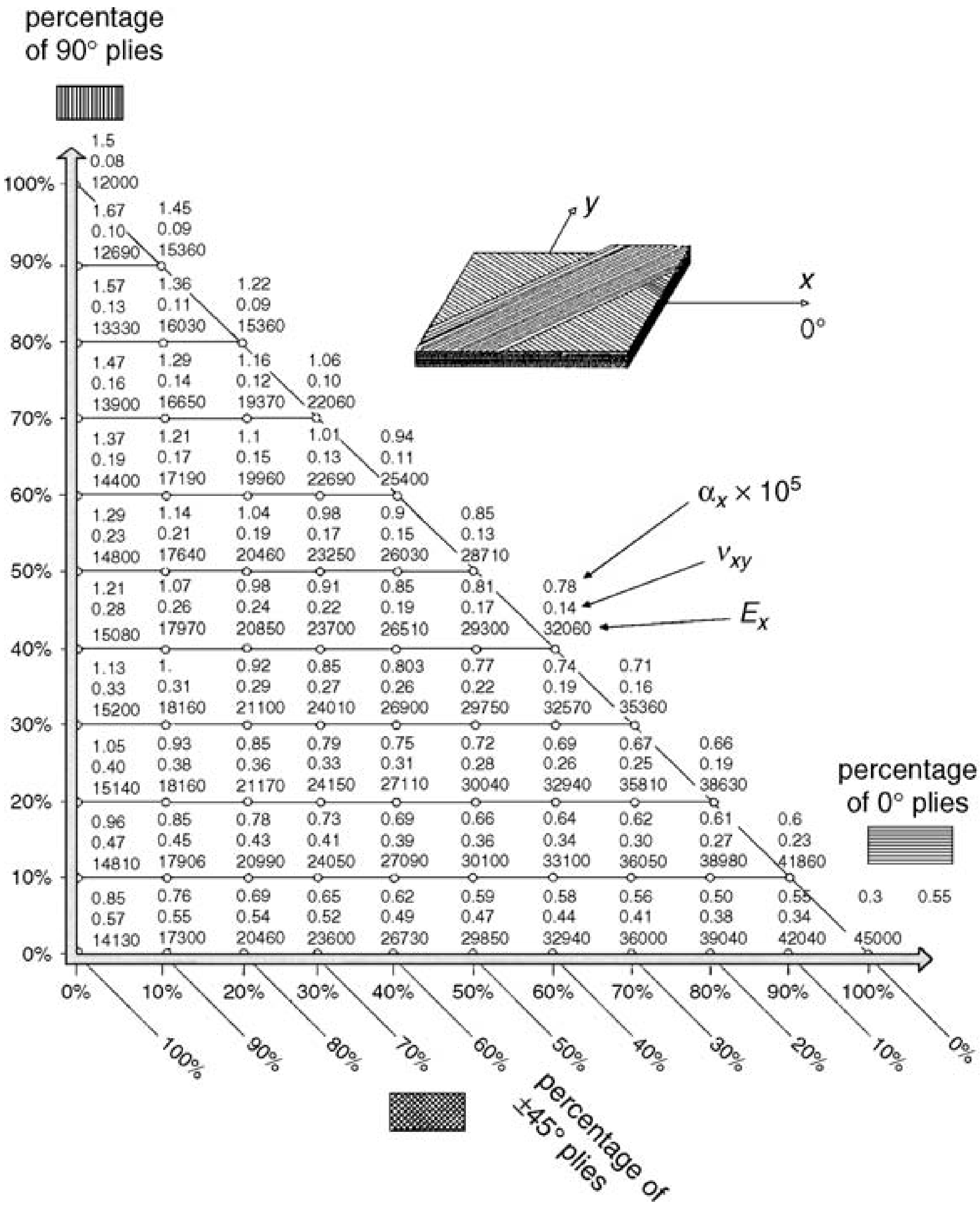

Figure B.6.1 – Longitudinal modulus, E_x (MPa), Poisson ratio, υ_{xy}, and coefficient of thermal expansion, α_x, as a function of the ply percentages in the directions 0°, 90°, +45° and -45° (Gay, Hoa & Tsai 2003)

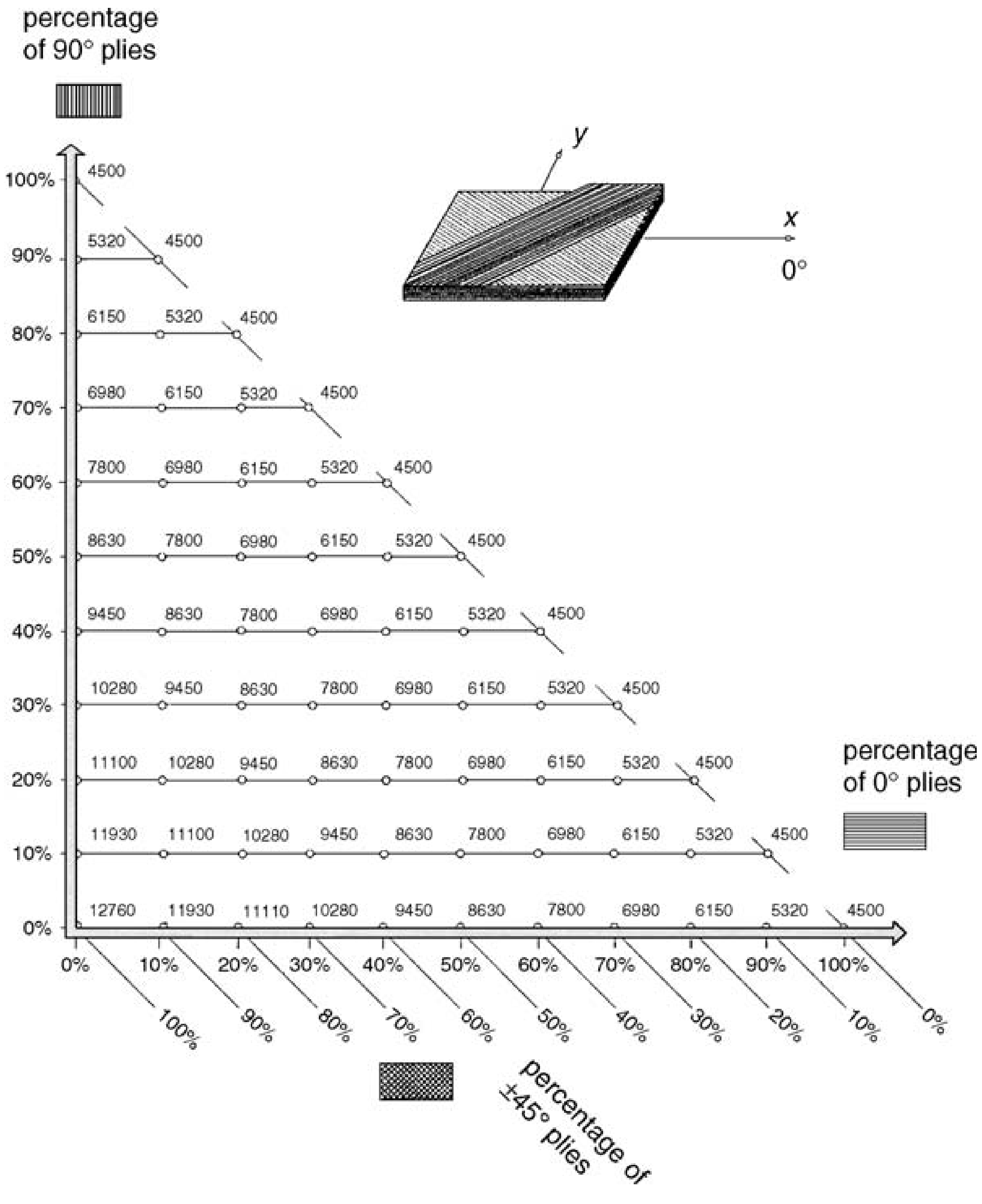

Figure B.6.2 – Shear modulus, G_{xy} (MPa) as a function of the ply percentages in the directions 0°, 90°, +45° and -45° (Gay, Hoa & Tsai 2003)

References

ABARE – see Australian Bureau of Agricultural and Resource Economics
ABS – see Australian Bureau of Statistics
AGO – see Australian Greenhouse Office
AWEA – see American Wind Energy Association
BCSE – see Business Council – Sustainable Energy
BOM – see Bureau of Meteorology
CanWEA – see Canadian Wind Energy Association
CSIRO – see Commonwealth Scientific and Industrial Research Organisation
DCC – see Department of Climate Change
DEWHA – see The Department of the Environment, Water, Heritage and the Arts
EPA – see Environment Protection Agency
IEA – see International Energy Agency
IPCC – see Intergovernmental Panel on Climate Change
NREL – see National Renewable Energy Laboratory
ORER – see The Office of the Renewable Energy Regulator
TSRA – see Torres Strait Regional Authority
UNDESA – see United Nations Department of Economic and Social Affairs

ABARE, 2006, Energy Update 2006, ABARE, Canberra, Australia, viewed on 14 July 2008, <http://www.abareconomics.com/publications_html/energy/energy_06/energyupdate_06.pdf>

ABARE, 2008a, Energy Update 2008, ABARE, Canberra, Australia, viewed on 14 July 2008, <http://www.abareconomics.com/publications_html/energy/energy_08/energyUPD08.pdf>

ABARE, 2008b, Energy in Australia 2008, ABARE, Canberra, Australia, viewed on 14 July 2008, <http://www.abareconomics.com/publications_html/energy/energy_08/energyAUS08.pdf>

ABS 2006, Australian Bureau of Statistics, Canberra, Australia, accessed on 19 July 2008, <http://www.abs.gov.au/>

AGO, 2003a, *Climate Change: An Australian Guide to the Science and Potential Impacts*, AGO, Canberra, viewed on 19 August 2008, <http://www.climatechange.gov.au/science/guide/pubs/science-guide.pdf>

AGO, 2003b, *Renewable Opportunities: A Review of the Operation of the Renewable Energy (Electricity) Act 2000*, AGO, Canberra, viewed on 8 September 2008, <http://www.mretreview.gov.au/report/pubs/mret-review.pdf>

Akasofu S., 2007, *Is the Earth recovering from the Little Ice Age? A possible cause of global warming*, viewed 24 August 2008, <http://www.iarc.uaf.edu/highlights/2007/akasofu_3_07/Earth_recovering_from_LIA.pdf>

Ashby M, Jones D, 2005, *Engineering Materials 1: An Introduction to Properties, Applications and Design*, Butterworth-Heinemann, Oxford, England.

Anhua Wind 2008, Jiaxing Anhua Wind Power Generator Co. Ltd., Jiaxing, China, accessed on 15 July 2008, <http://www.anhua-wind.com/>

Applied Magnets 2008, Applied Magnets, Plano, TX, USA, accessed on 14 July 2008, < http://www.magnet4less.com/>

Australian Government, 2007, *Best Practice Regulation Handbook*, Canberra, viewed on 20 September 2008, < http://www.finance.gov.au/obpr/docs/handbook.pdf>

Australian Government, 2008, *Media Release - $1 Million for Small Wind Turbine Testing Centre*, Australian Government, Canberra, viewed on August 15 2008, <http://www.environment.gov.au/minister/garrett/2008/pubs/mr20080812.pdf>

AWEA 2008, American Wind Energy Association, Washington DC, U.S.A., accessed on 4 September 2008, <http://www.awea.org/>

AWEA, 2007, *Small Wind Turbine Global Market Study*, AWEA, U.S.A, viewed on 14 August 2008, <http://www.awea.org/smallwind/documents/AWEASmallWindMarketStudy2007.pdf>

Batteries Plus 2008, Batteries Plus Technologies, Osborne Park, WA, Australia, accessed on 29 September 2008, <http://www.batteriesplus.com.au/pl/239/deep-cycle-batteries>

BCSE 2008, Business Council – Sustainable Energy, Melbourne, Australia, accessed on 6 September 2008, <http://www.bcse.org.au/>

BOM, 2003, *The Greenhouse Effect and Climate Change*, BOM, Australia, viewed on 13 August 2008, <http://www.bom.gov.au/info/GreenhouseEffectAndClimateChange.pdf>

BOM, 2008, BOM, Melbourne, Victoria, Australia, accessed on 10 September 2008, <http://www.bom.gov.au/index.shtml>

Boyden, S. 1994, *The Human Situation in the Biosphere: An Overview*, Nature and Society Forum, Australia, viewed on 4 March 2008, <http://www.natsoc.org.au/html/publications/occasionalpapers/humansit.html>

Brent R, 2006, *Applied Cost-Benefit Analysis*, 2nd ed, Edward Elgar Publishing Ltd., Cheltenham, UK.

Burton T., Sharpe D., Jenkins N., Bossanyi E., 2001, *Wind Energy Handbook*, John Wiley & Sons, Chichester, England.

Cambooya Shire Council, 2005, *Minutes of the Ordinary Meeting held on Wednesday, 21 September 2005*, Cambooya Shire Council, Queensland, viewed on 2 September 2008, <http://www.cambooya.qld.gov.au/minutes/20050921minutes.pdf>

Campbell H, Brown R, 2003, *Benefit-Cost Analysis: Financial and Economic Appraisal Using Spreadsheets*, Cambridge University Press, New York, USA.

CanWEA 2008, Canadian Wind Energy Association, Ottawa, Ontario Canada, accessed on 4 September 2008, <http://canwea.ca/index_e.php>

CMS Magnetics 2008, CMS Magnetics Co., Plano, Texas, USA, accessed on 14 July 2008, <http://www.cmsmagnetics.com/>

Coppin P, Ayotte K, Steggel N, 2003, *Wind Resource Assessment in Australia: A Planner's Guide*, CSIRO Wind Energy Research Unit, Australia, viewed on 26 August 2008, <http://www.csiro.au/files/files/pis7.pdf>

DCC, 2008a, Department of Climate Change, Canberra, accessed on 31 August 2008, < http://www.climatechange.gov.au/>

DCC, 2008b, *Carbon Pollution Reduction Scheme - Overview*, Department of Climate Change, Canberra, viewed 30 Aug 2008, <http://www.climatechange.gov.au/greenpaper/factsheets/pubs/fs1.pdf>

DEWHA 2008, DEWHA, viewed on 25 August 2008, <http://www.environment.gov.au/settlements/renewable/rrpgp/index.html>

Division for Sustainable Development, *Energy for Sustainable Development,* viewed 20 May 2008, <http://www.un.org/esa/sustdev/sdissues/energy/enr.htm>

Energy Matters 2008, Energy Matters, Hurlstone Park, NSW, Australia, accessed on 30 September 2008, <http://www.energymatters.com.au/>

Engineers Australia, 2000, *Code of Ethics – 2000*, Engineers Australia, Australia, viewed on 15 April 2008, <http://www.engineersaustralia.org.au/shadomx/apps/fms/fmsdownload.cfm?file_uuid=F0647595-C7FE-7720-EA17-70AC27062E0B&siteName=ieaust>

EPA 2007, Environmental Protection Agency, Queensland Government, accessed on 22 August 2008, <http://www.epa.qld.gov.au/images/parks_and_forests/renewable_energy.gif>

Ergon Energy 2008a, Ergon Energy, Queensland, viewed on 2 September 2008 <http://www.ergon.com.au/network_info/isolated_and_remote_power_stations/default.asp#map>

Ergon Energy 2008b, Ergon Energy, Queensland, accessed on 6 September 2008, <http://www.ergon.com.au/>

Fox R, McDonald A, Pritchard P, 2004, *Introduction to Fluid Mechanics*, 6th ed, John Wiley & Sons Inc., New Jersey, USA.

FuturEnergy 2008, FuturEnergy Ltd, Warwickshire, UK, accessed on 15 July 2008, < http://www.futurenergy.co.uk/>

Garnaut .R, 2008, *Garnaut Climate Change Review: Draft Report*, Commonwealth of Australia, Canberra, viewed on 24 August 2008, <http://www.garnautreport.org.au/draft.htm>

Gay D, Hoa S, Tsai S, 2003, *Composite Materials: Design and Application*, CRC Press, Florida, USA.

Ginlong 2006, Ningbo Ginlong Technologies Co. Ltd., accessed on 3 September 2008, < http://www.ginlong.com/wind-turbine-pmg-pma-permanent-magnet-generator-alternator.htm>

Hau, E., 2006, *Wind Turbines: Fundamentals, Technologies, Application, Economics*, 2nd Ed., Springer, Germany.

IEA 2007, *Key World Energy Statistics*, IEA, France, viewed on 18 July 2008, <http://www.iea.org/textbase/nppdf/free/2007/Key_Stats_2007.pdf>

IPCC, 2007: Summary for Policymakers. In: *Climate Change 2007: The Physical Science Basis. Contribution of Working Group I to the Fourth Assessment Report of the Intergovernmental Panel on Climate Change* [Solomon, S., D. Qin, M. Manning, Z. Chen, M. Marquis, K.B. Averyt, M.Tignor and H.L. Miller (eds.)]. Cambridge University Press, Cambridge, United Kingdom and New York, NY, USA.

Ireson N, 2008, *FCAI Calls for Diesel Price Monitoring*, Car Central, Australia, viewed on September 20 2008, <http://www.carcentral.com.au/20080415365/government/fcai-calls-for-diesel-price-monitoring.html>

Juvinall R, Marshek K, 2000, *Fundamentals of Machine Component Design*, 3rd ed, John Wiley & Sons, New Jersey, USA.

Landsea C., 2005, “Extracts from an open letter to the scientific community from Chris Landsea”, *Energy and Environment*, vol. 16, pp. 355-356, Multi-Science Publishing Co. Ltd, Brentwood, Essex, United Kingdom.

Manwell, J., McGowan, J., Rogers, A., 2002, *Wind Energy Explained: Theory Design and Application*, John Wiley & Sons, Chichester, England.

Migliore P., van Dam J., Huskey A., 2003, *Acoustic Tests of Small Wind Turbines: Preprint*, National Renewable Energy Laboratory, Colorado, U.S.A., viewed on 12 August 2008, < http://www.nrel.gov/docs/fy04osti/34662.pdf>

NREL, 2008, National Renewable Energy Laboratory, Colorado, U.S.A., viewed on 12 August 2008, <http://www.nrel.gov/wind/>

ORER, 2008a, *Fact Sheet: Mandatory Renewable Energy Target Overview*, ORER, Canberra, Australia, viewed on 23 August 2008, <http://www.orer.gov.au/publications/pubs/mret-overview-feb08.pdf>

ORER, 2008b, *Fact Sheet: Calculating Renewable Energy Certificates (RECs) for Small Wind Turbines*, ORER, Canberra, Australia, viewed on 23 August 2008, < http://www.orer.gov.au/publications/pubs/wind0306.pdf>

Oreskes, N., 2005, "Erratum: The scientific consensus on climate change", Science, vol. 307, p. 355, American Association for the Advancement of Science, Washington, United States.

Passey R, Watt M, Outhred H, Spooner T, Snow M, 2007, *Study of Grid-Connected Photovoltaic Systems – Benefits, Opportunities, Barrier and Strategies,* University of New South Wales, Australia, viewed on September 20 2008, <http://www.sedo.energy.wa.gov.au/pdf/PVreport-ExecutiveSummary.pdf>

Queensland Government, 2008, Queensland Government, accessed on 31 August 2008, < http://www.climatechange.qld.gov.au/>

Rossiter D, Singh A, 2005, *Australia’s Renewable Energy Certificate System*, ORER, Parkes, ACT.

Schlager N., Weisblatt J. (eds) 2006, *Alternative Energy*, vol. 3, Thomson Gale, Detroit.

Sørensen B., 2004, *Renewable Energy: Its physics, engineering, use, environmental impacts, economy and planning aspects*, 3rd ed., Elsevier Science, Amsterdam.

Standards Australia, 2006, *AS 61400.2 (Int.) - 2006*, *Wind Turbines – Design Requirements for Small Wind Turbines*, Standards Australia.

State of Environment Townsville, 2008, State of Environment Townsville, viewed on 3 April 2008, <http://www.soe-townsville.org/strandwindproject/wind_in_queensland.html>

TSRA 2008, *Climate Change in the Torres Strait and the Impact on Indigenous Peoples,* Torres Strait Regional Authority, Torres Strait Islands, Australia, viewed on 14 September 2008, <http://www.aph.gov.au/house/committee/ccwea/coastalzone/subs/sub007.pdf>

Torres News, 1 June 2008, *Power Station Upgrades at Badu, Bamaga*, Torres News, Thursday Island, Australia, viewed on 14 September 2008, <http://www.torresnews.com.au/index.php?option=com_content&task=view&id=851&Itemid=1>

UNDESA 2008, United Nations Department of Economic and Social Affairs, New York, USA, accessed on 4 April 2008, <http://www.un.org/esa/sustdev/index.html>

University of Newcastle (n.d. a), *Researcher Report – Assoc. Prof. David Wood*, University of Newcastle, NSW, Australia, viewed on 28 August 2008, <http://www.newcastle.edu.au/research/expertise/135238.html>

University of Newcastle (n.d. b), *Researcher Report – Dr. Philip Clausen*, University of Newcastle, NSW, Australia, viewed on 28 August 2008, <http://www.newcastle.edu.au/research/expertise/135388.html>

Webb A., 2007, The Viability of DomesticWind Turbines for Urban Melbourne, Alternative Technology Association, Victoria, Australia viewed on 14 August 2008, <http://www.advocacypanel.com.au/documents/Applic246Windturbineviablity.pdf>

WindBlue 2008, WindBlue Power, New Strawn, KS, USA, accessed on 14 July 2008, <http://www.windbluepower.com/>

Zhongcheng 2008, Qingdao Zhongcheng FRP Engineering Co. Ltd., Qingdao, China, accessed on 15 July 2008, <http://www.zhongchengfrp.com/>